US010600989B1

(12) **United States Patent**
Ai et al.

(10) **Patent No.: US 10,600,989 B1**
(45) **Date of Patent: *Mar. 24, 2020**

(54) **ELECTRONIC DEVICES WITH FLEXIBLE DISPLAYS**

(71) Applicant: **Apple Inc.**, Cupertino, CA (US)

(72) Inventors: **Jiang Ai**, Cupertino, CA (US); **Erik A. Uttermann**, San Francisco, CA (US); **Soyoung Kim**, San Jose, CA (US)

(73) Assignee: **Apple Inc.**, Cupertino

(*) Notice: Subject to any disclaimer, the term of this patent is extended or adjusted under 35 U.S.C. 154(b) by 0 days.

This patent is subject to a terminal disclaimer.

(21) Appl. No.: **16/019,431**

(22) Filed: **Jun. 26, 2018**

Related U.S. Application Data

(63) Continuation of application No. 15/177,025, filed on Jun. 8, 2016, now Pat. No. 10,020,462.

(60) Provisional application No. 62/199,187, filed on Jul. 30, 2015.

(51) **Int. Cl.**
H01L 51/52 (2006.01)

(52) **U.S. Cl.**
CPC ***H01L 51/524*** (2013.01); *H01L 2251/5338* (2013.01)

(58) **Field of Classification Search**
None
See application file for complete search history.

(56) **References Cited**

U.S. PATENT DOCUMENTS

7,034,915 B2 4/2006 Nishiki
7,180,665 B2 2/2007 Daniel et al.
8,358,395 B1 1/2013 Szeremeta
9,098,242 B2 8/2015 Rappoport
9,203,050 B2 12/2015 Jeong et al.
9,295,168 B2 3/2016 Baek
9,627,637 B2 4/2017 Kwon
10,020,462 B1 * 7/2018 Ai H01L 51/524
2011/0050657 A1 * 3/2011 Yamada H01L 27/3293 345/204
2011/0148797 A1 6/2011 Huitema et al.
2012/0307423 A1 12/2012 Bohn et al.
2012/0314399 A1 12/2012 Bohn et al.
2013/0083496 A1 4/2013 Franklin et al.
2013/0169515 A1 * 7/2013 Prushinskiy G06F 1/1652 345/55
2014/0042406 A1 2/2014 Degner et al.
2014/0240985 A1 8/2014 Kim et al.
2014/0346474 A1 11/2014 Jeong et al.
(Continued)

Primary Examiner — Lex H Malsawma

(74) *Attorney, Agent, or Firm* — Treyz Law Group, P.C.; G. Victor Treyz; Kendall W. Abbasi

(57) **ABSTRACT**

An electronic device may have a hinge that allows the device to be flexed about a bend axis. A display may span the bend axis. To facilitate bending about the bend axis, the display may have layers such as a display cover layer with grooves or other recesses. The recesses form a flexible portion in the display layer. The display layer may be formed from glass or other materials that are transparent. Elastomeric material, fluids, and other materials may be placed in the recesses in the display layer. The material in the display layer may have an index of refraction that is matched to the index of refraction of the display layer. A hinge may be formed between rigid planar layers that are separated by a gap. Flexible layers that lie flush with opposing surfaces of the rigid planar layers may be used to span the gap.
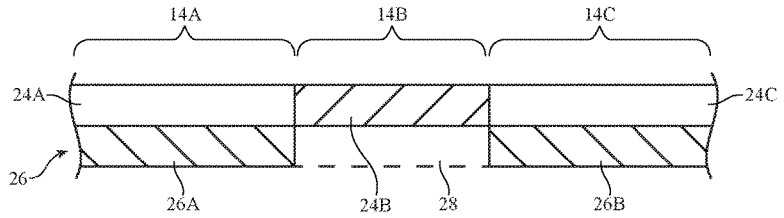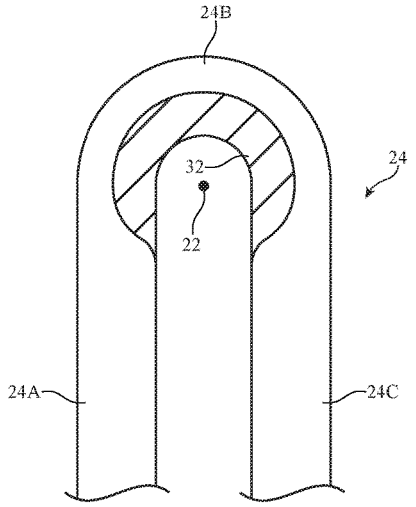
20 Claims, 19 Drawing Sheets