J. D. PEDERSEN.

GUN OPERATING CARTRIDGE.

APPLICATION FILED OCT. 21, 1911. RENEWED OCT. 28, 1913.

1,097,988. Patented May 26, 1914.

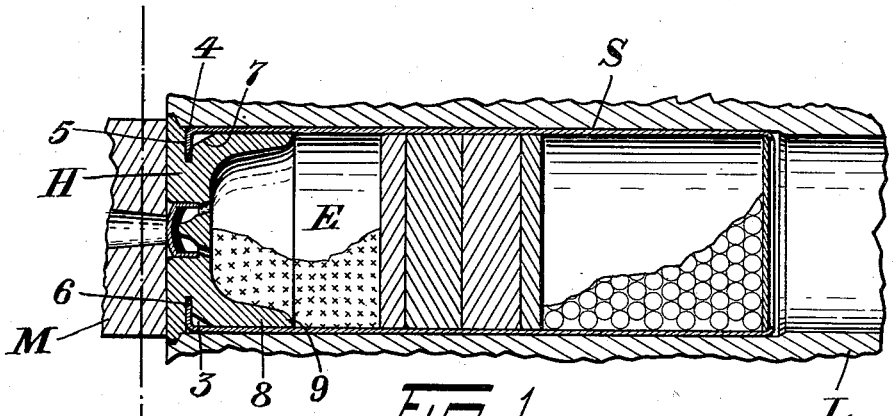

FIG. 1.

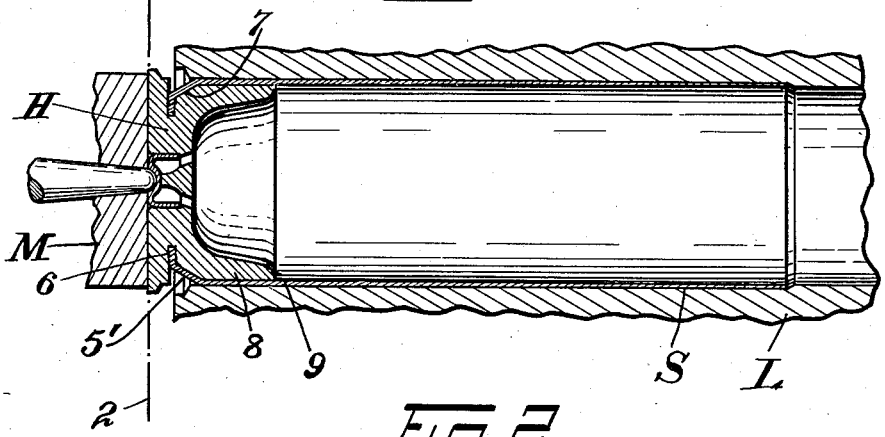

FIG. 2.

Witnesses:
A. B. Mattingly
H. O. Penney

Inventor:
John D. Pedersen,
By his Attorney F. H. Richards.

COLUMBIA PLANOGRAPH CO., WASHINGTON, D. C.