US008535088B2

(12) **United States Patent**
Gao et al.

(10) **Patent No.: US 8,535,088 B2**
(45) **Date of Patent: Sep. 17, 2013**

(54) **MAGNETIC CONNECTOR HAVING A UNITARY HOUSING**

(75) Inventors: **Zheng Gao**, San Jose, CA (US); **John C. DiFonzo**, Emerald Hills, CA (US); **Joshua Banko**, Palo Alto, CA (US); **Min Chul Kim**, Santa Clara, CA (US)

(73) Assignee: **Apple Inc.**, Cupertino, CA (US)

(*) Notice: Subject to any disclaimer, the term of this patent is extended or adjusted under 35 U.S.C. 154(b) by 0 days.

(21) Appl. No.: **12/582,308**

(22) Filed: **Oct. 20, 2009**

(65) **Prior Publication Data**

US 2011/0092081 A1 Apr. 21, 2011

(51) **Int. Cl.**
H01R 3/00 (2006.01)

(52) **U.S. Cl.**
USPC **439/490**; 439/950; 439/39

(58) **Field of Classification Search**
USPC 439/638
See application file for complete search history.

(56) **References Cited**

U.S. PATENT DOCUMENTS

2,170,287	A	8/1939	Kinnebrew
2,234,982	A	3/1941	Ross
3,144,527	A	8/1964	Tolegian
3,363,214	A	1/1968	Wright
3,431,428	A	3/1969	Valer
3,521,216	A	7/1970	Tolegian
3,713,370	A	1/1973	Prijn
3,786,391	A	1/1974	Mathauser
3,808,577	A	4/1974	Mathauser
3,810,258	A	5/1974	Mathauser
3,868,160	A	2/1975	Kersman
4,211,456	A	7/1980	Sears
4,317,969	A	3/1982	Riegler et al.
4,669,791	A	6/1987	Savill
4,810,202	A	3/1989	Nodfelt
4,844,582	A	7/1989	Giannini
5,382,167	A	1/1995	Janson, Jr.
5,385,476	A	1/1995	Jasper
5,556,284	A	9/1996	Itou et al.
5,696,861	A	12/1997	Schimmeyer
5,812,356	A	9/1998	O'Connor
5,829,987	A	11/1998	Fritsch et al.
5,921,783	A	7/1999	Fritsch et al.
5,941,729	A	8/1999	Sri-Jayantha
5,954,520	A	9/1999	Schmidt

(Continued)

FOREIGN PATENT DOCUMENTS

CA	2 122 915	3/1994
DE	36 22 948	1/1988

(Continued)

OTHER PUBLICATIONS

English Abstract of JP2002056929 to Zojirushi Corp, obtained from http://esp@cenet.com, 1-pg.

(Continued)

Primary Examiner — Truc Nguyen
(74) *Attorney, Agent, or Firm* — Kilpatrick Townsend & Stockton LLP

(57) **ABSTRACT**

Power cables that include plug housings having an improved appearance as well as employ a halogen-free cable while providing adequate fire resistance. One example provides a power cable having cable plug with a substantially unitary body. Another example provides a power cable that is formed using halogen-free materials. To provide adequate fire protection, a strain relief formed using multiple materials is used.
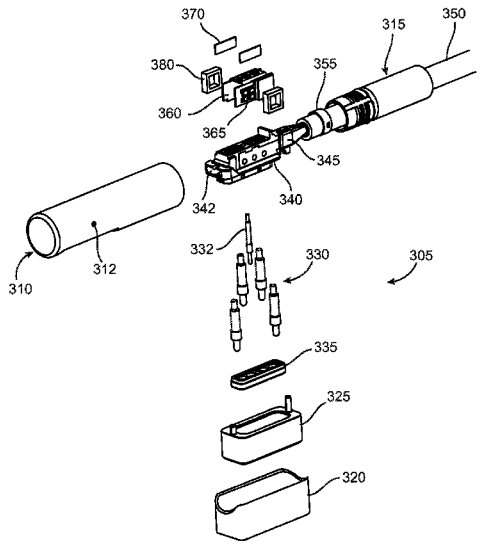
23 Claims, 6 Drawing Sheets