No. 811,888. PATENTED FEB. 6, 1906.

J. A. WILLIAMS.

EXPLOSIVE ENGINE.

APPLICATION FILED JAN. 9, 1905.

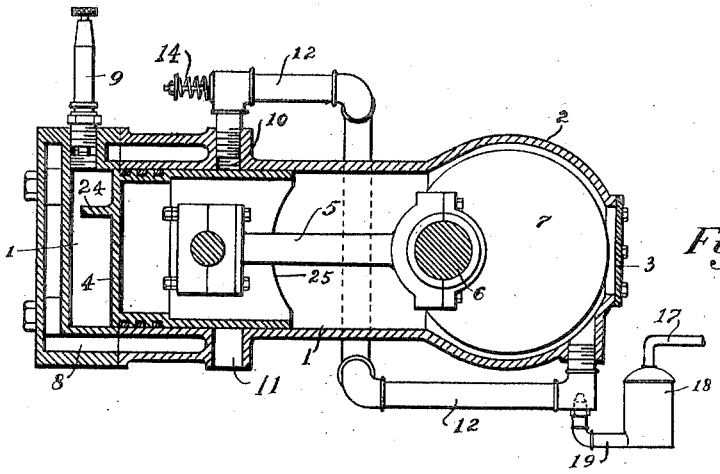

Fig. 1.

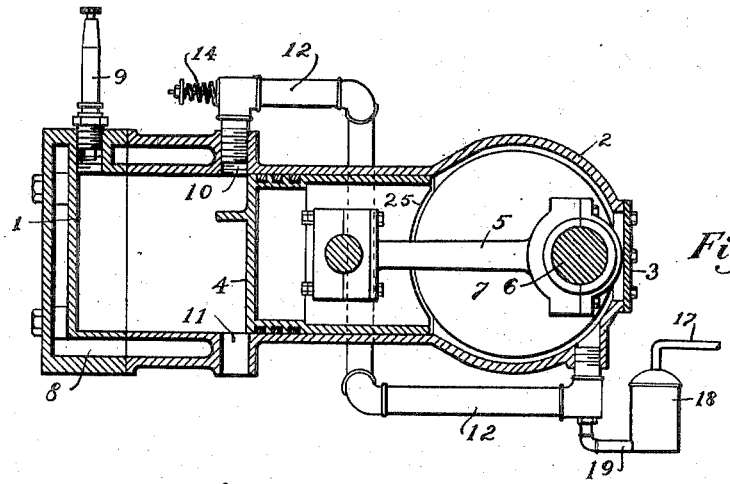

Fig. 2.

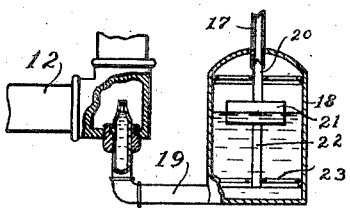

Fig. 3.

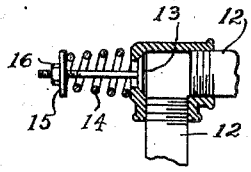

Fig. 4.

WITNESSES:

Brennan West.

C. M. Eley

INVENTOR,

Joseph A. Williams,

BY

Fouts & Hull,

ATTORNEYS.