SECRET COMMUNICATION SYSTEM

Filed June 10, 1941 2 Sheets-Sheet 2

Fig. 7.

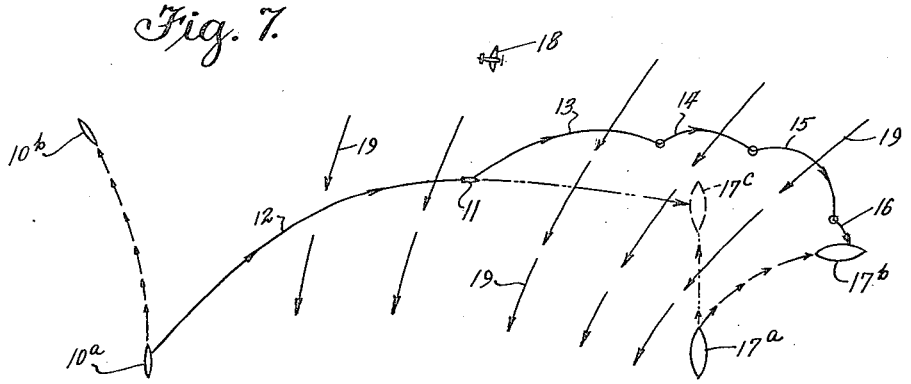

Fig. 4.

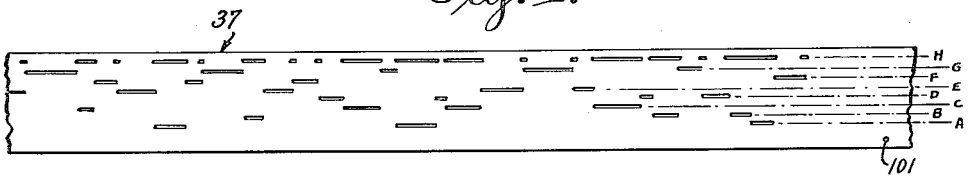

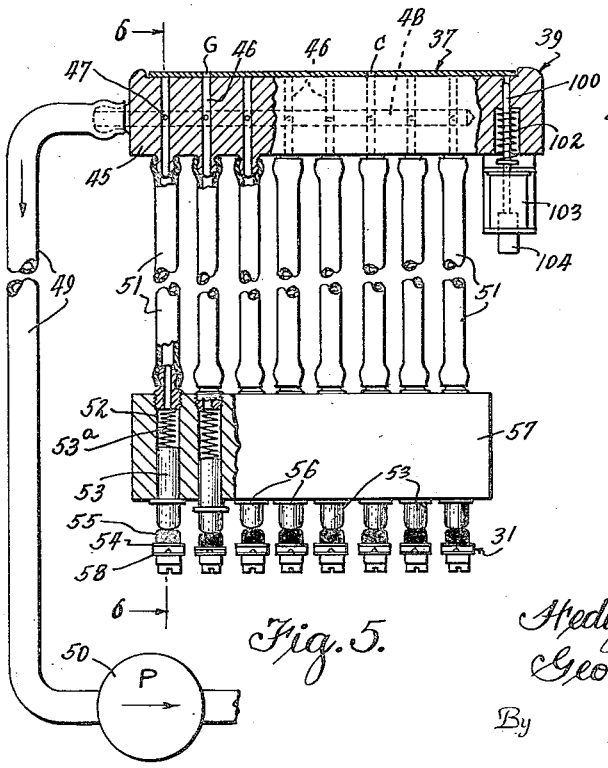

Fig. 5.

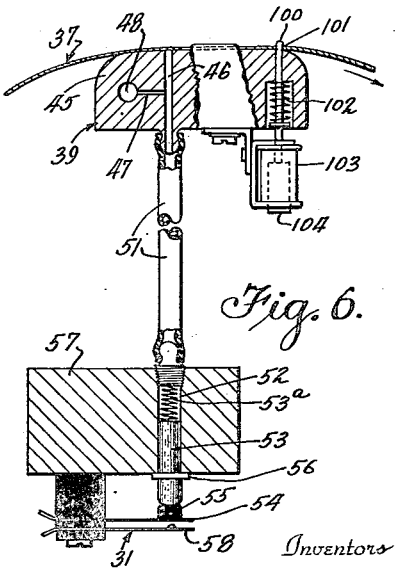

Fig. 6.

Inventors

Hedy Kiesler Markey

George Antheil

By Lyon & Lyon

Attorneys