H. R. BASFORD.

FOLDING CAMP TABLE.

APPLICATION FILED SEPT. 4, 1917.

1,272,187. Patented July 9, 1918.

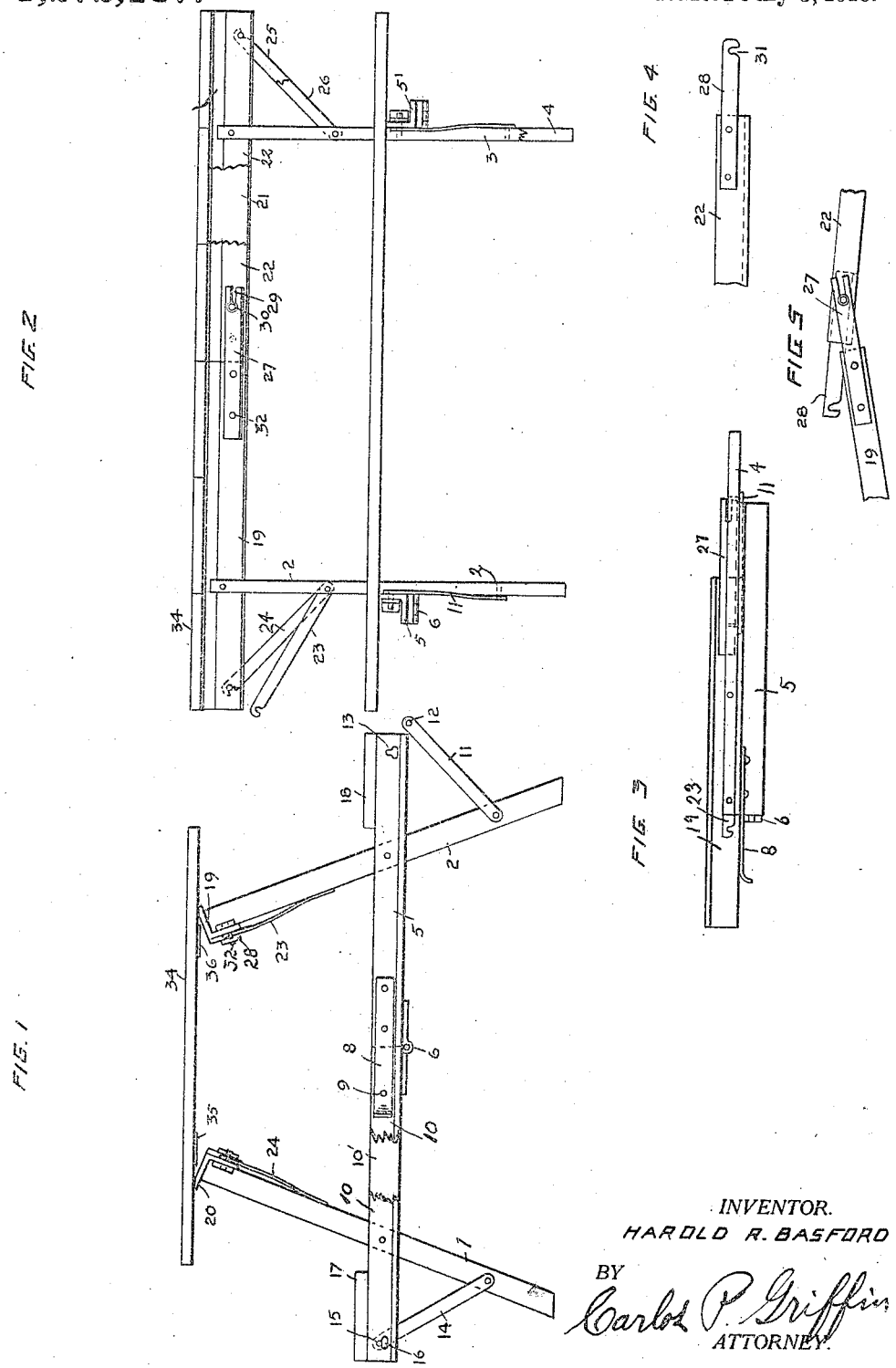

INVENTOR.
HAROLD R. BASFORD
BY
Carlos P. Griffin
ATTORNEY.