CYLINDRICAL OBJECT EJECTING APPARATUS

Filed Oct. 11, 1950 3 Sheets-Sheet 1

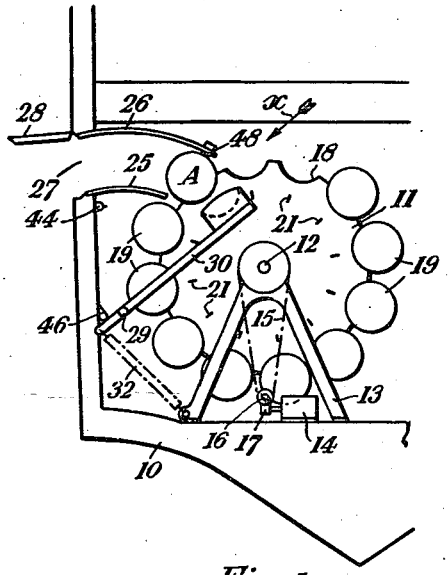

Fig. 1.

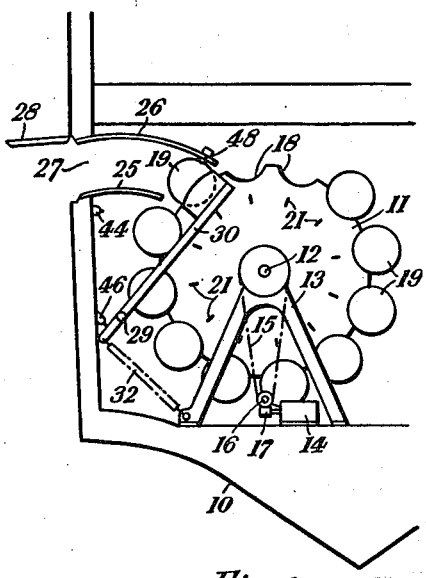

Fig. 2.

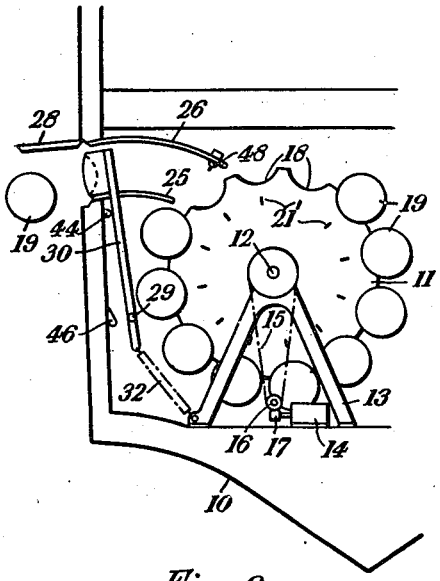

Fig. 3.

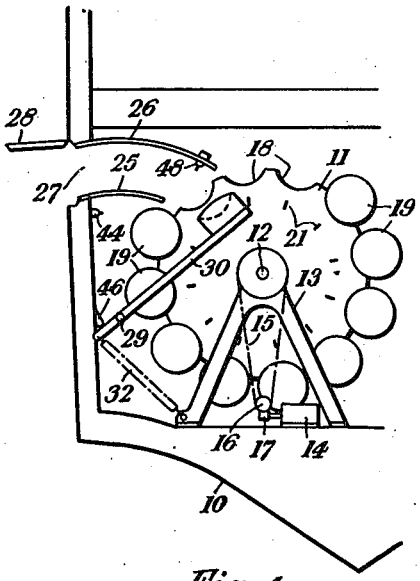

Fig. 4.

Inventor
Frank Henry Robertson
By Moses, Holt, Crews & Berry
Attorneys