US010246186B1

(12) **United States Patent**
Beckman et al.

(10) **Patent No.: US 10,246,186 B1**
(45) **Date of Patent: Apr. 2, 2019**

(54) **UNMANNED AERIAL VEHICLE WITH INFLATABLE MEMBRANE**

(71) Applicant: **Amazon Technologies, Inc.**, Seattle, WA (US)

(72) Inventors: **Brian C. Beckman**, Newcastle, WA (US); **Noam Sorek**, Zichron Yaccov (IL)

(73) Assignee: **Amazon Technologies, Inc.**, Seattle, WA (US)

(*) Notice: Subject to any disclaimer, the term of this patent is extended or adjusted under 35 U.S.C. 154(b) by 282 days.

(21) Appl. No.: **15/065,767**

(22) Filed: **Mar. 9, 2016**

(51) **Int. Cl.**
B64C 39/02 (2006.01)
B64B 1/62 (2006.01)
B64C 27/08 (2006.01)

(52) **U.S. Cl.**
CPC ***B64C 39/024*** (2013.01); ***B64B 1/62*** (2013.01); ***B64C 27/08*** (2013.01); *B64B 2201/00* (2013.01)

(58) **Field of Classification Search**
CPC . B64C 39/024; B64C 2201/108; B64C 27/08; B64C 2201/128; B64B 1/34; B64B 1/40; B64B 1/62; B64B 1/70; B64B 2201/00
See application file for complete search history.

(56) **References Cited**

U.S. PATENT DOCUMENTS

3,558,083 A * 1/1971 Conley B64B 1/40 244/33
3,801,044 A * 4/1974 Moore B64B 1/00 244/125
3,856,238 A * 12/1974 Malvestuto, Jr. B64B 1/00 244/25
4,889,297 A * 12/1989 Ikeda B64C 37/02 244/25
5,026,003 A * 6/1991 Smith B64B 1/02 244/127
6,167,263 A * 12/2000 Campbell B64B 1/06 244/164
6,354,535 B1 * 3/2002 Perry B64B 1/06 244/24
6,648,272 B1 * 11/2003 Kothmann B64B 1/005 244/30
6,793,180 B2 * 9/2004 Nachbar B64B 1/02 244/125
6,860,449 B1 * 3/2005 Chen B64B 1/06 244/12.1
7,147,184 B1 * 12/2006 Purvis, IV B64B 1/04 244/24
8,286,910 B2 * 10/2012 Alavi B64B 1/60 244/30

(Continued)

Primary Examiner — Assres H Woldemaryam
(74) *Attorney, Agent, or Firm* — Athorus, PLLC

(57) **ABSTRACT**

This disclosure describes an unmanned aerial vehicle ("UAV") including an inflatable membrane (e.g., a balloon) and a compressed gas chamber containing a gas (e.g., helium, hydrogen, etc.) for inflating the membrane. When the UAV is approaching or departing from a location where noise reduction is desirable (e.g., a delivery location), the membrane may be inflated so as to increase the buoyancy of the UAV and allow the propulsion system (e.g., utilizing propellers, etc.) to be operated with less thrust and correspondingly with less noise. Once the UAV has departed and reached a certain distance from the location, the membrane may be deflated and retracted back into a storage area of the UAV.
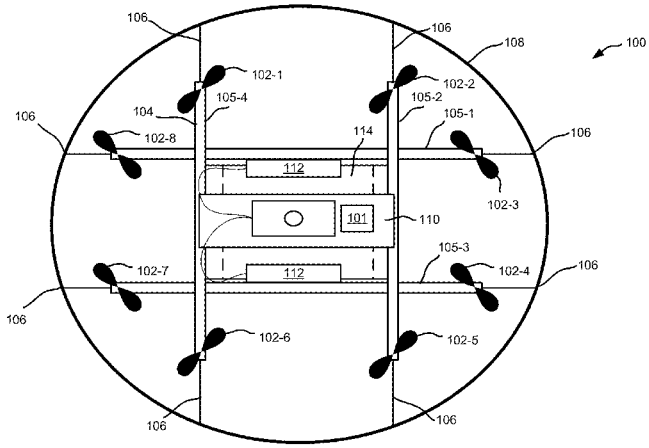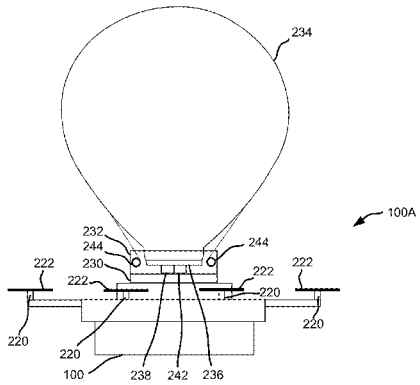
21 Claims, 12 Drawing Sheets