Oct. 22, 1963 E. A. ADELMAN 3,107,786

SURGICAL GLOVE PACKAGE

Filed Feb. 1, 1961 2 Sheets-Sheet 1

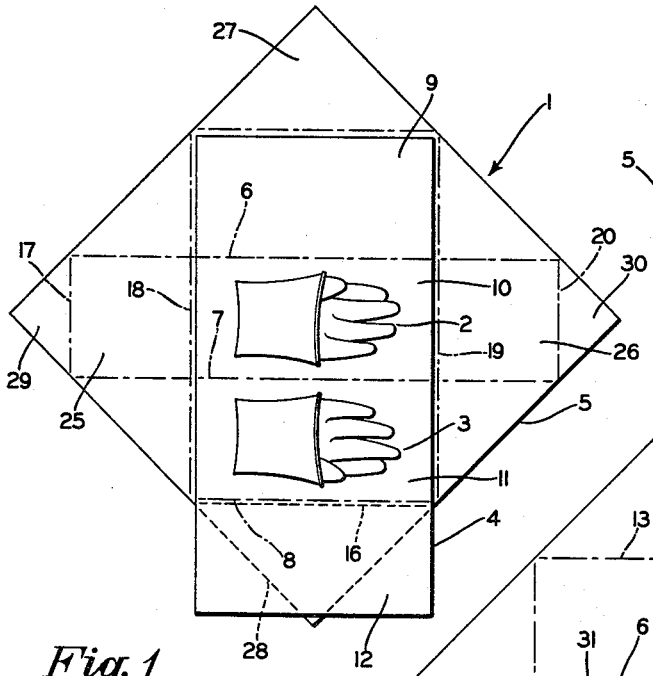

Fig. 1

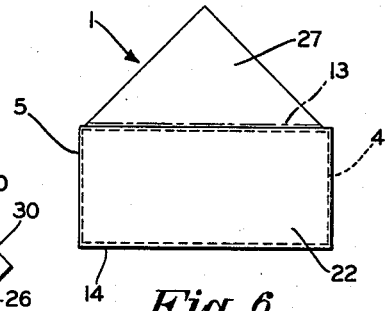

Fig. 6

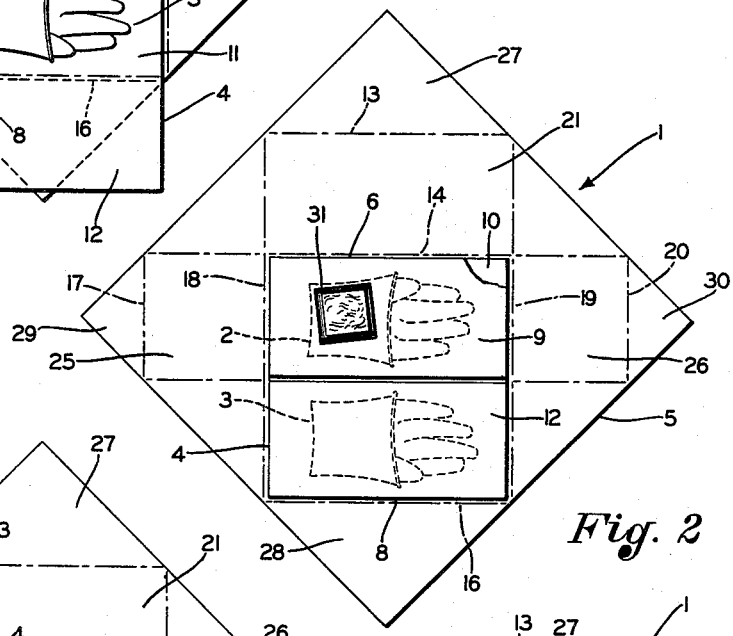

Fig. 2

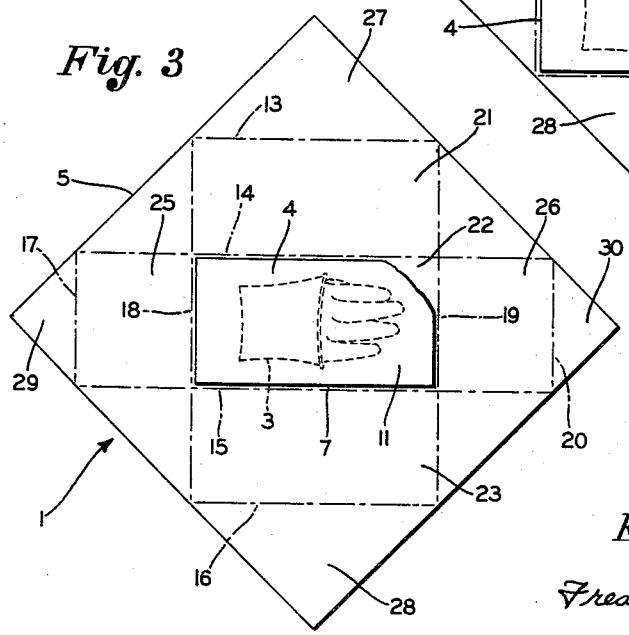

Fig. 3

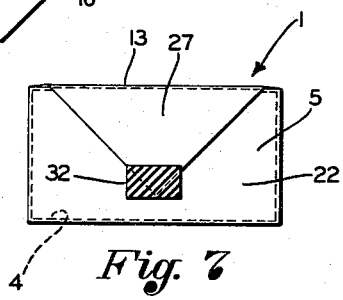

Fig. 7

INVENTOR.
Edward A. Adelman
BY
Frease, Bishop, Johns & Schick
ATTORNEYS