Nov. 17, 1953 R. A. DULEY ET AL 2,659,485

SYRINGE SUPPORTING AND IDENTIFYING TRAY

Filed March 14, 1952

Fig. 1.

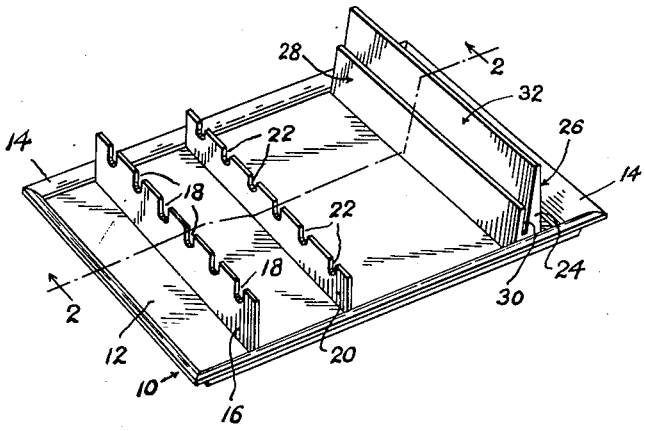

Fig. 2.

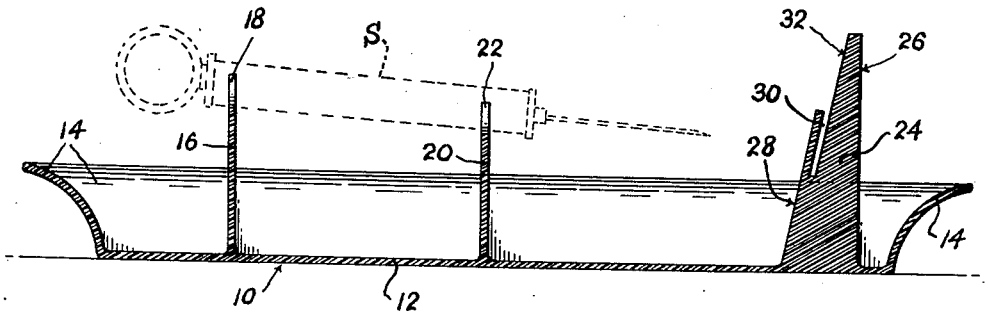

INVENTORS

Roscoe A. Duley
Merrel E. Hosler &

BY

McMorrow, Berman & Davidson
ATTORNEYS