G. G. BAIN.

PRINTING APPARATUS.

APPLICATION FILED FEB. 18, 1910.

1,012,585. Patented Dec. 26, 1911.

3 SHEETS—SHEET 1.

Fig. 1.

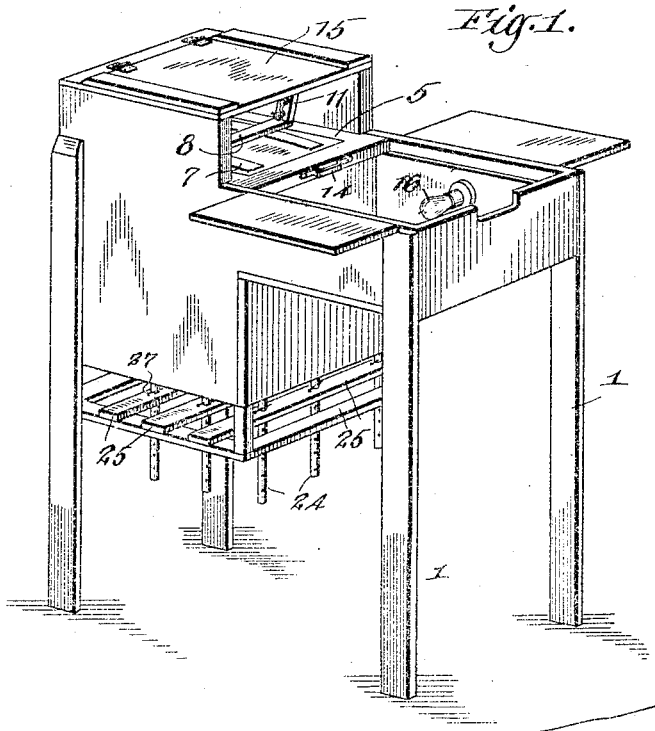

Fig. 2

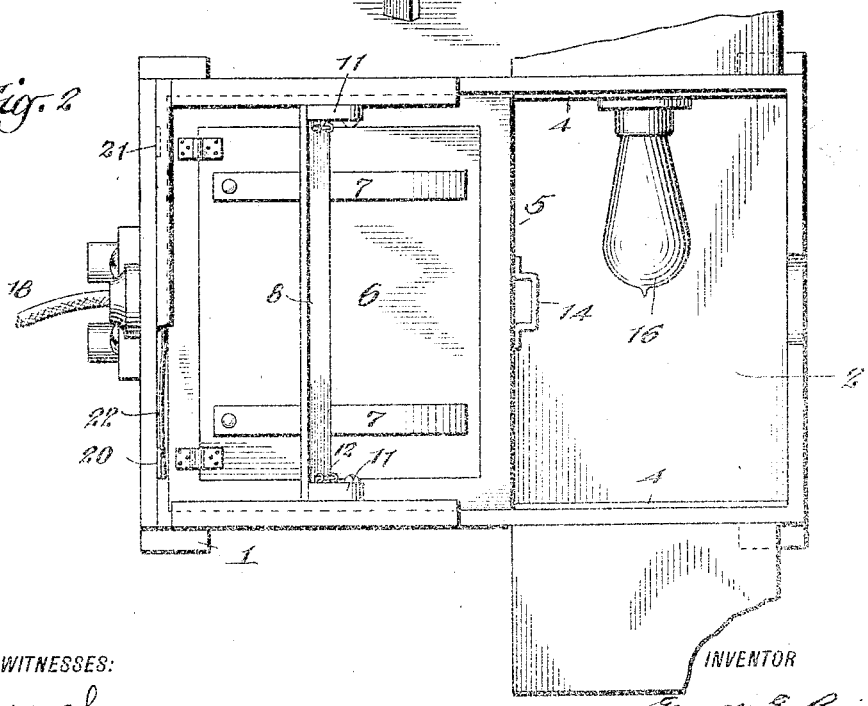

WITNESSES:

H. Crocheron

W. P. Burke

INVENTOR

George G. Bain

BY

H. M. Wallace White

ATTORNEY