June 6, 1950 R. C. DEHMEL 2,510,385

FLIGHT TRAINING APPARATUS

Filed April 10, 1945 4 Sheets-Sheet 1

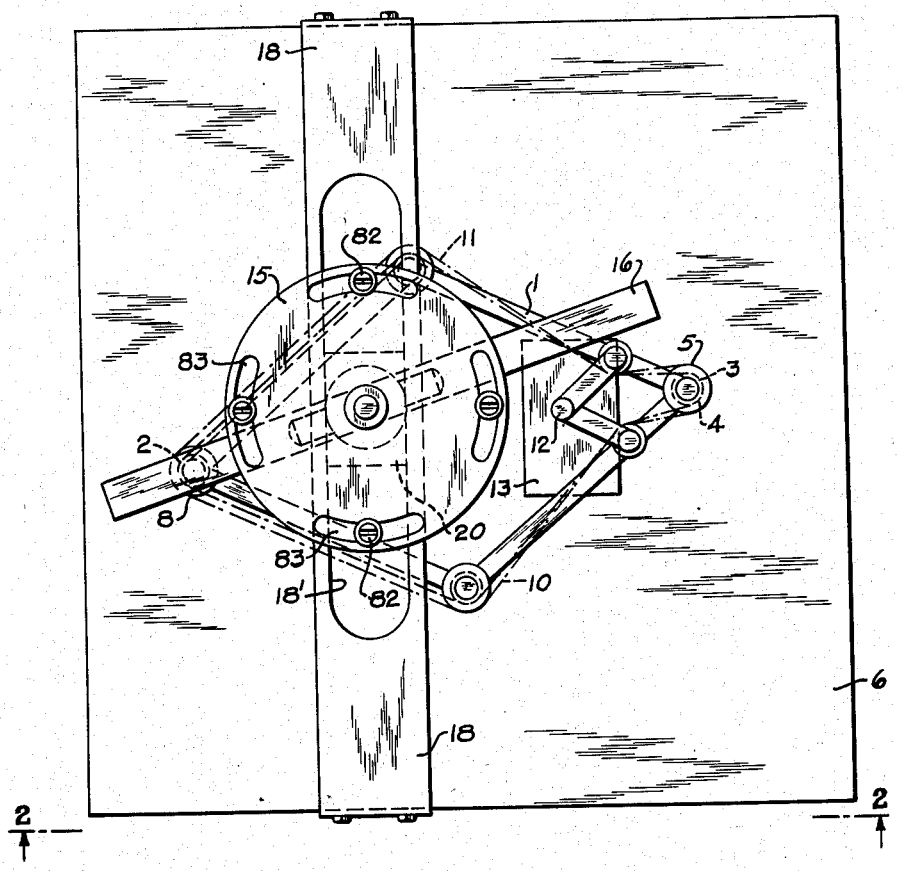

FIG. 1

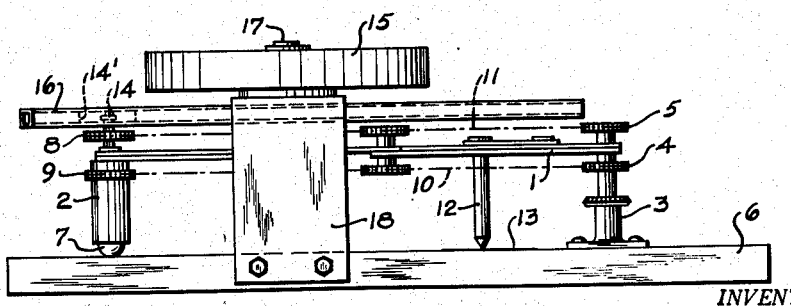

FIG. 2

INVENTOR.
RICHARD C. DEHMEL.

BY Rumley Seeley
ATTORNEY