Feb. 20, 1934. E. O. LAWRENCE 1,948,384

METHOD AND APPARATUS FOR THE ACCELERATION OF IONS

Filed Jan. 26, 1932 2 Sheets-Sheet 1

Fig. 1.

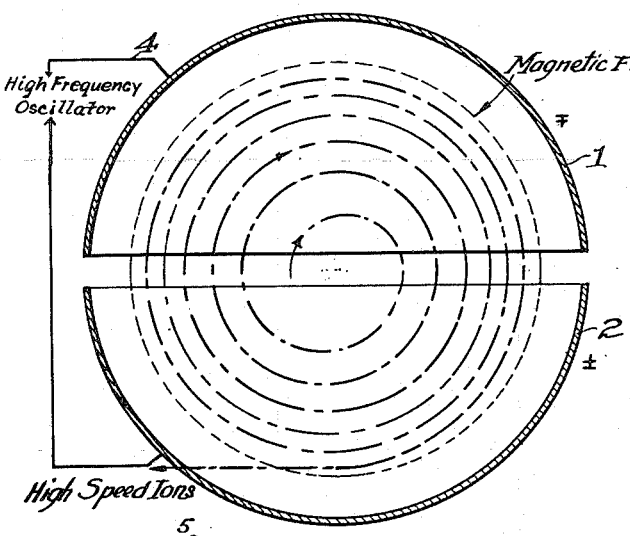

Fig. 2.

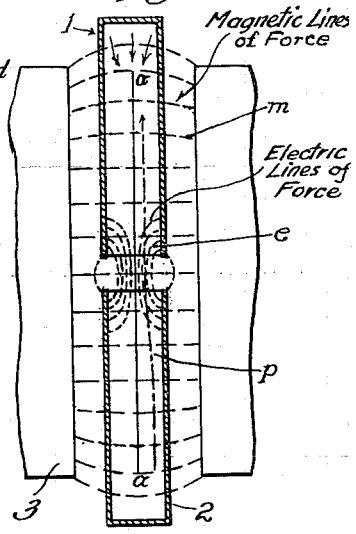

Fig. 4.

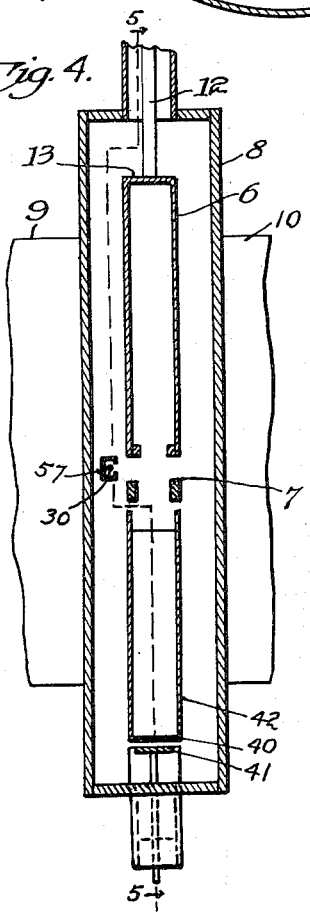

Fig. 3.

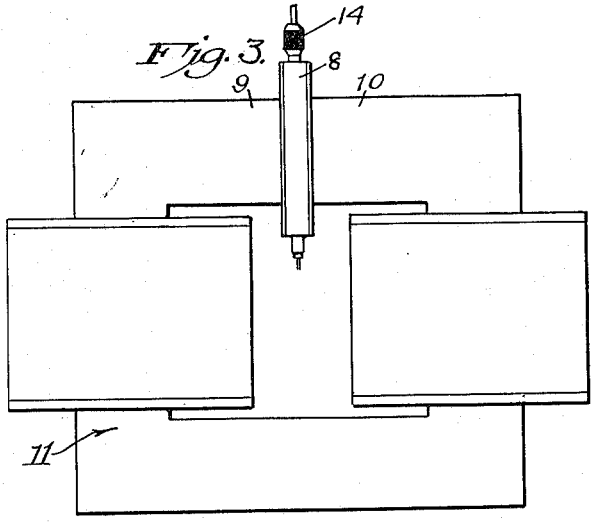

INVENTOR.
Ernest O. Lawrence,

BY Arthur P. Knight
Alfred W. Knight
ATTORNEY.