Oct. 13, 1959 S. UHL 2,908,484

BARBED WIRE SPIRAL

Filed April 23, 1958

Fig. 1

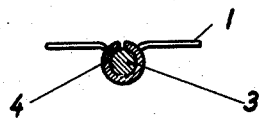

Fig. 2

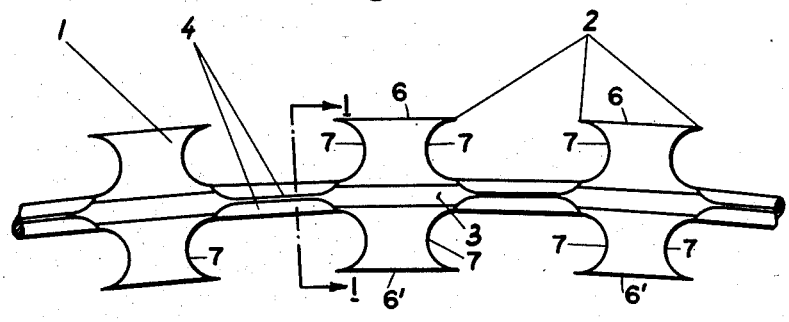

Fig. 3

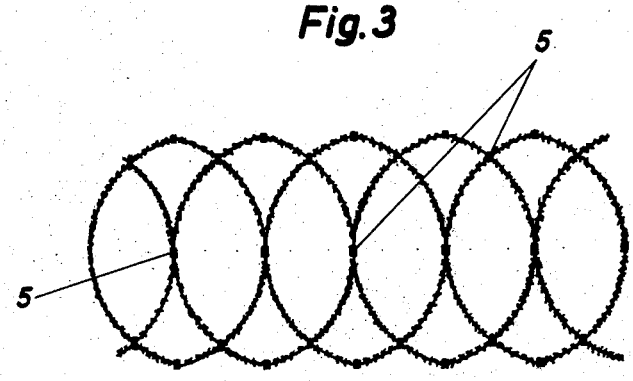

INVENTOR.
Siegfried Uhl
BY
Lowry & Rinehart
ATTYS.