J. D. PEDERSEN.

CARTRIDGE.

APPLICATION FILED MAY 14, 1912.

1,081,983.

Patented Dec. 23, 1913.

FIG. 1.

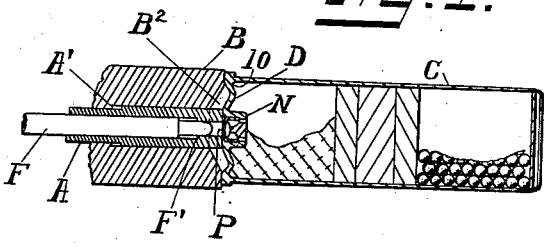

FIG. 3.

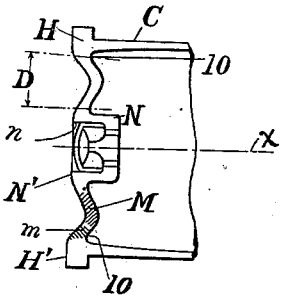

FIG. 2.

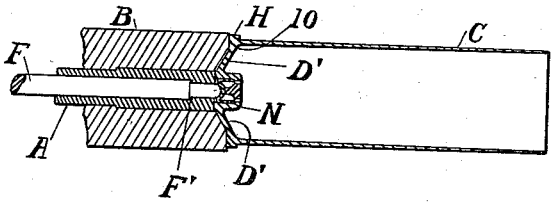

FIG. 4.

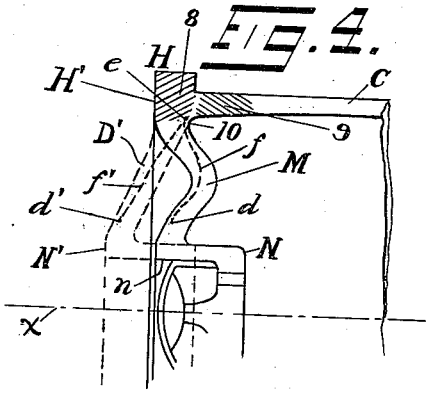

FIG. 5.

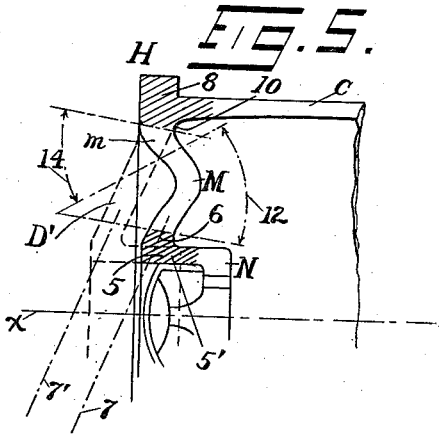

Witnesses:

Chas. E. Whiteman,

H. D. Penney

Inventor:

John D. Pedersen,

By F. W. Richards, Attorney.

COLUMBIA PLANOGRAPH CO., WASHINGTON, D. C.