May 31, 1938. E. A. LINK, JR 2,119,083

AVIATION TRAINER

Filed July 26, 1934 2 Sheets-Sheet 1

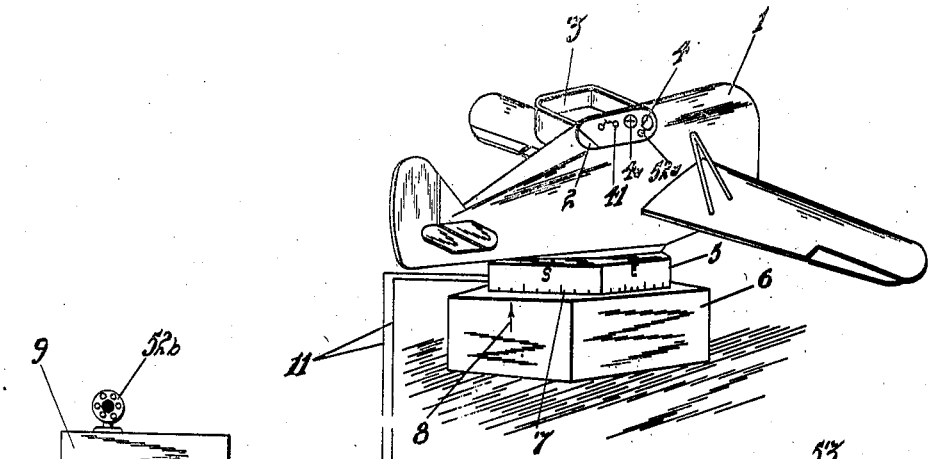

Fig. 1.

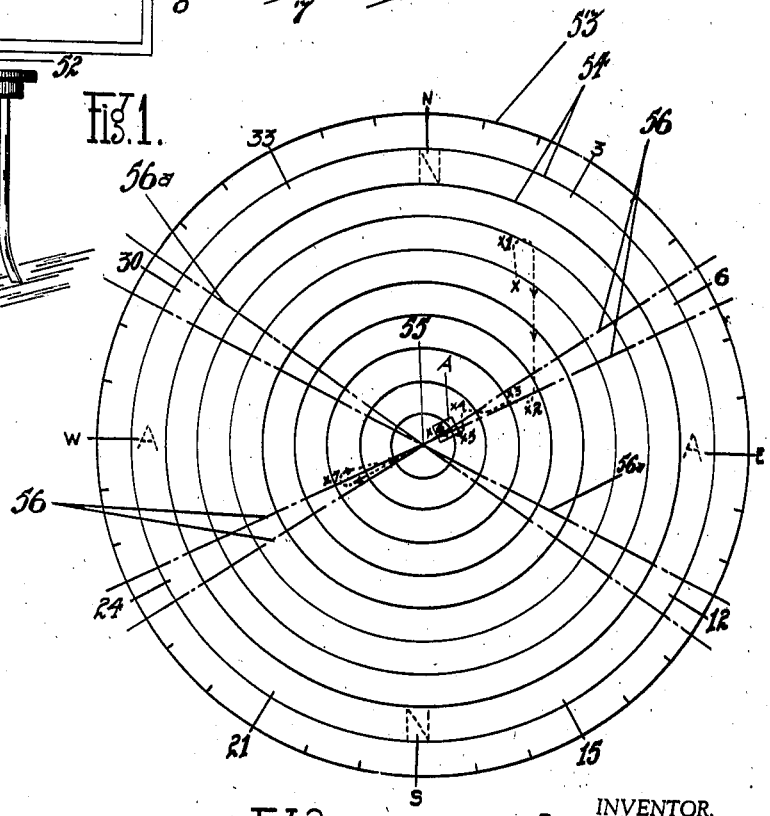

Fig. 2.

INVENTOR.
EDWIN A. LINK, JR.

BY Philip S. Hopkins

ATTORNEY.