March 21, 1967 W. A. RHODES 3,310,483

MULTICELL OXYHYDROGEN GENERATOR

Filed Nov. 22, 1963

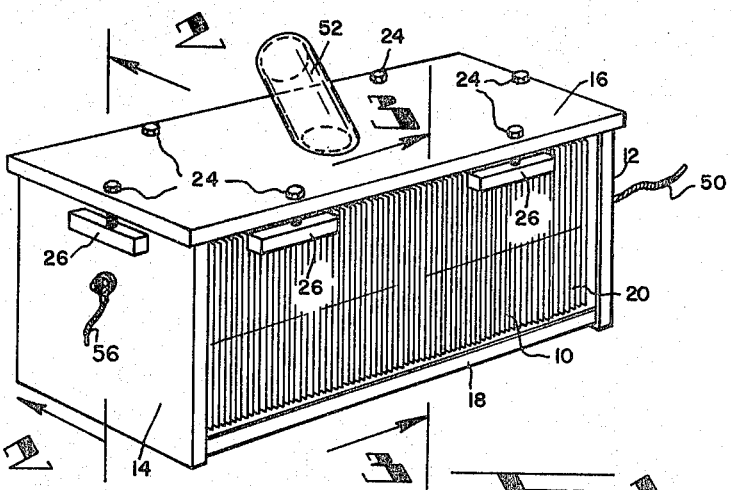

FIG. 1

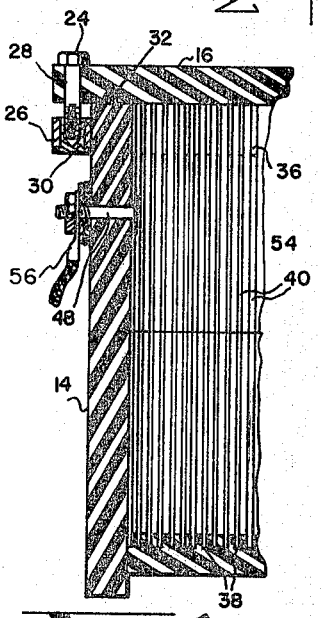

FIG. 2

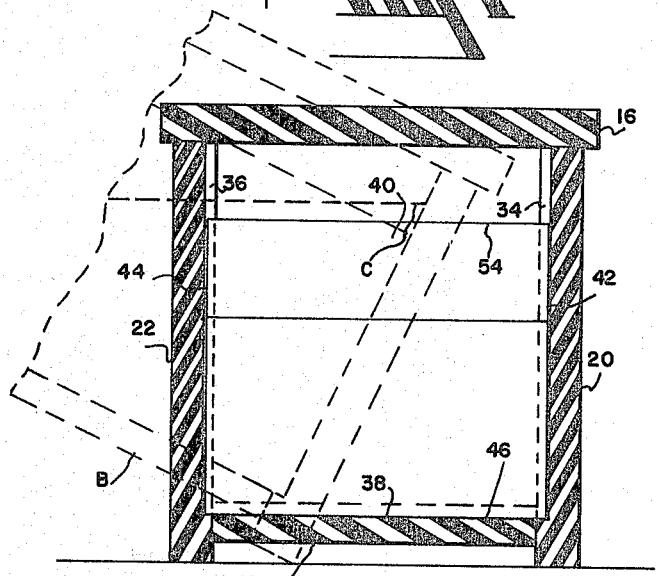

FIG. 3

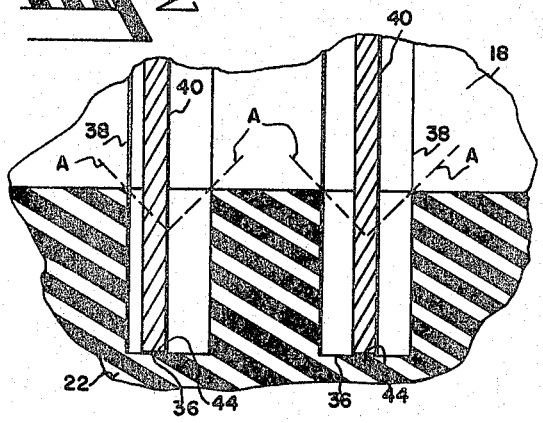

FIG. 4

INVENTOR.
WILLIAM A. RHODES
BY
Wm. H. Dean