J. D. PEDERSEN.

FIREARM.

APPLICATION FILED JUNE 29, 1907.

908,883. Patented Jan. 5, 1909.

4 SHEETS—SHEET 1.

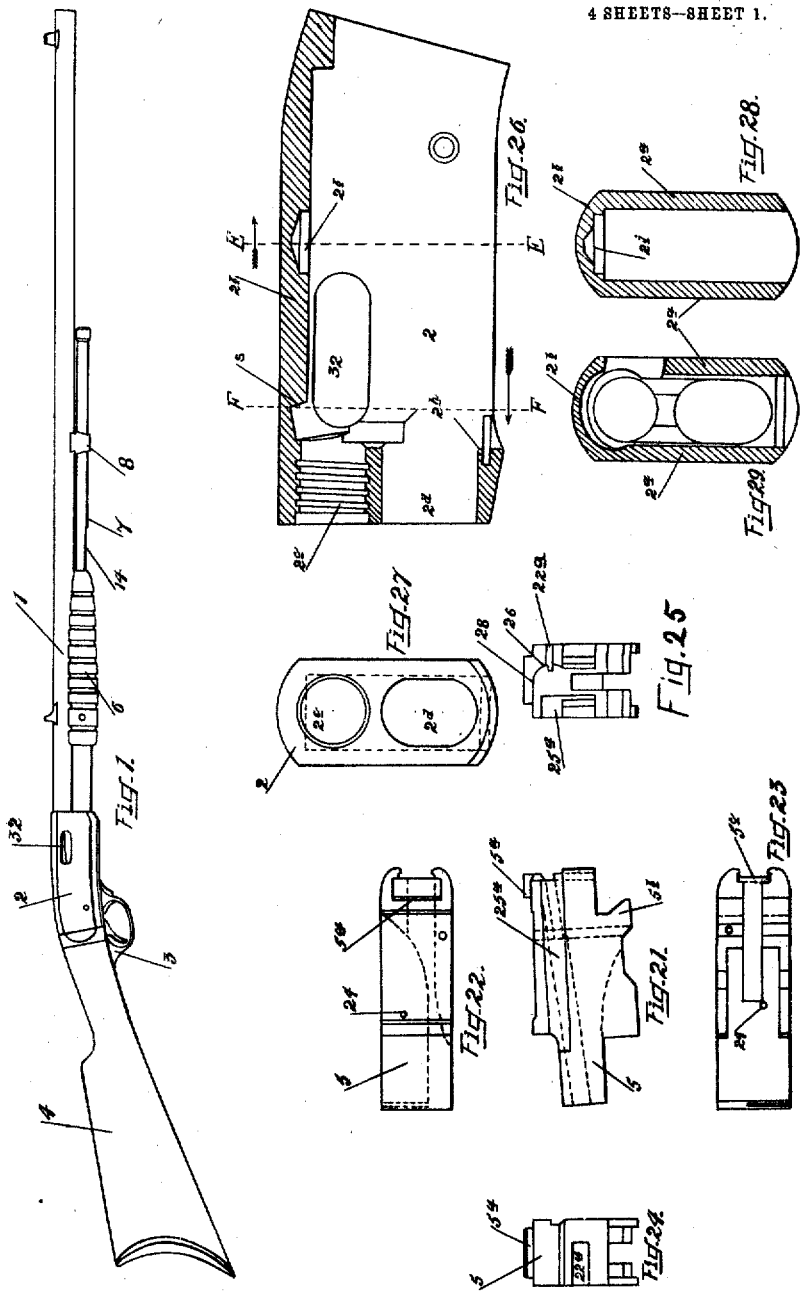

WITNESSES
Chas. A. Yardell
Sarah E. Clark

INVENTOR
JOHN D. PEDERSEN
BY Robinson Martin & Jones
ATTORNEYS

NORRIS PETERS, INC., LITHO., WASHINGTON, D. C.