United States Patent [19]

Myer

[11] **Patent Number: 5,052,782**

[45] **Date of Patent: Oct. 1, 1991**

[54] **RESILIENT LENS MOUNTING APPARATUS**

[75] Inventor: **Jon H. Myer**, Woodland Hills, Calif.

[73] Assignee: **Hughes Aircraft Company**, Los Angeles, Calif.

[21] Appl. No.: **323,532**

[22] Filed: **Mar. 14, 1989**

[51] **Int. Cl.**[5] **G02B 7/02**; G02B 21/00; G02B 15/00

[52] **U.S. Cl.** **359/827**; 359/819; 359/830; 359/900; 359/694

[58] **Field of Search** 350/252-257, 350/245, 248, 429, 320; 267/166-180; 277/97-100, 152, 153; 285/318-319

[56] **References Cited**

U.S. PATENT DOCUMENTS

3,468,527	9/1969	Mather	267/167
3,927,252	12/1975	Polley	350/255
3,966,183	6/1976	Mayer, Sr.	267/167
4,525,745	6/1985	Ghaem-Maghami et al.	350/253
4,553,545	11/1985	Maass et al.	267/167
4,655,462	4/1987	Balsells	267/167
4,678,210	7/1987	Balsells	285/318
4,707,083	11/1987	Iizuka et al.	350/429
4,805,943	2/1989	Balsells	285/318

FOREIGN PATENT DOCUMENTS

147901	6/1985	Fed. Rep. of Germany	350/252

Primary Examiner—Bruce Y. Arnold
Assistant Examiner—Thong Nguyen
Attorney, Agent, or Firm—Leonard A. Alkov; Wanda Denson-Low

[57] **ABSTRACT**

Lens barrel (**12**) has a shoulder (**16**) therein and a retaining ring to retain lens (**20**) within the lens barrel. A canted coil spring member (**24**) is engaged between the retaining ring and lens to resiliently retain the lens in place against thermal cycling, vibration and shock.
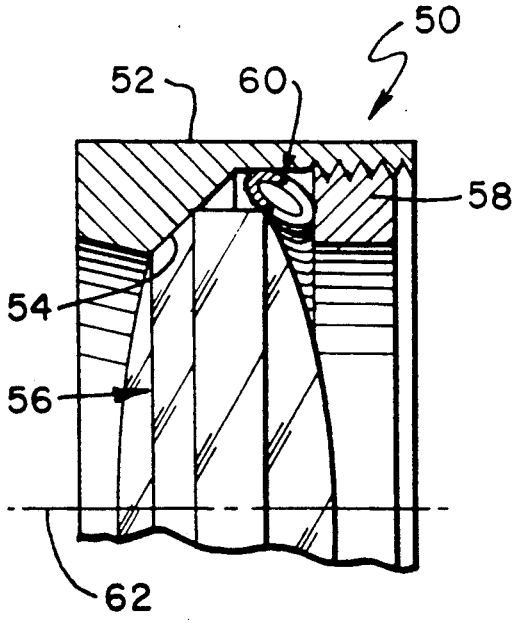
17 Claims, 2 Drawing Sheets