Oct. 24, 1961 G. K. CHRISTIANSEN 3,005,282

TOY BUILDING BRICK

Filed July 28, 1958 2 Sheets-Sheet 1

FIG. 1.

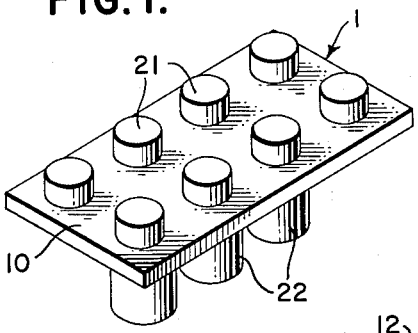

FIG. 2.

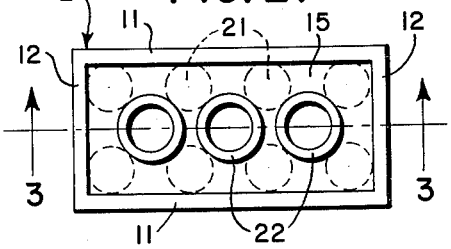

FIG. 3.

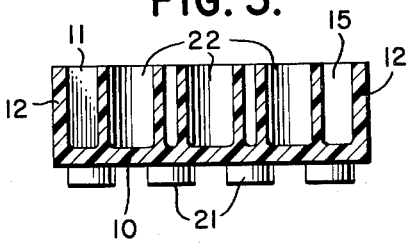

FIG. 4.

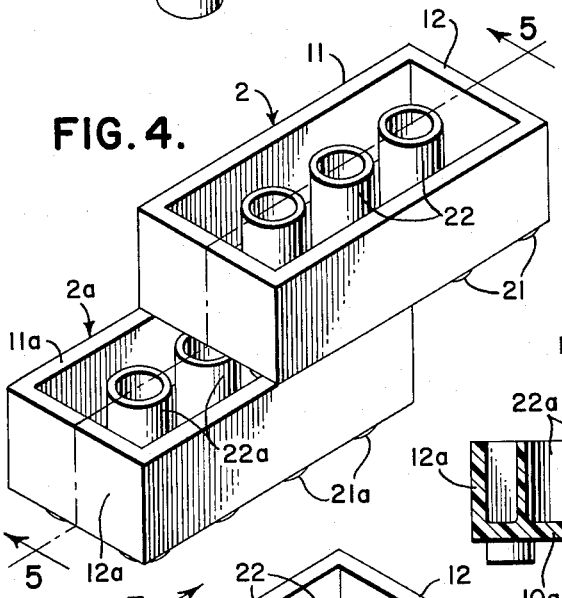

FIG. 5.

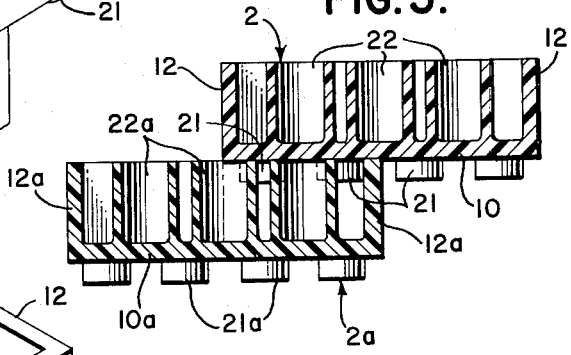

FIG. 6.

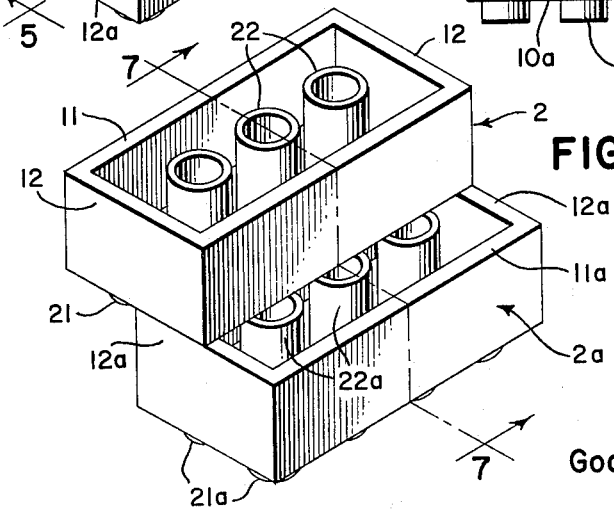

INVENTOR

Godtfred Kirk Christiansen

BY Stevens, Davis, Miller & Mosher
ATTORNEYS