J. D. PEDERSEN.

FIREARM.

APPLICATION FILED JULY 5, 1913.

1,087,680. Patented Feb. 17, 1914.

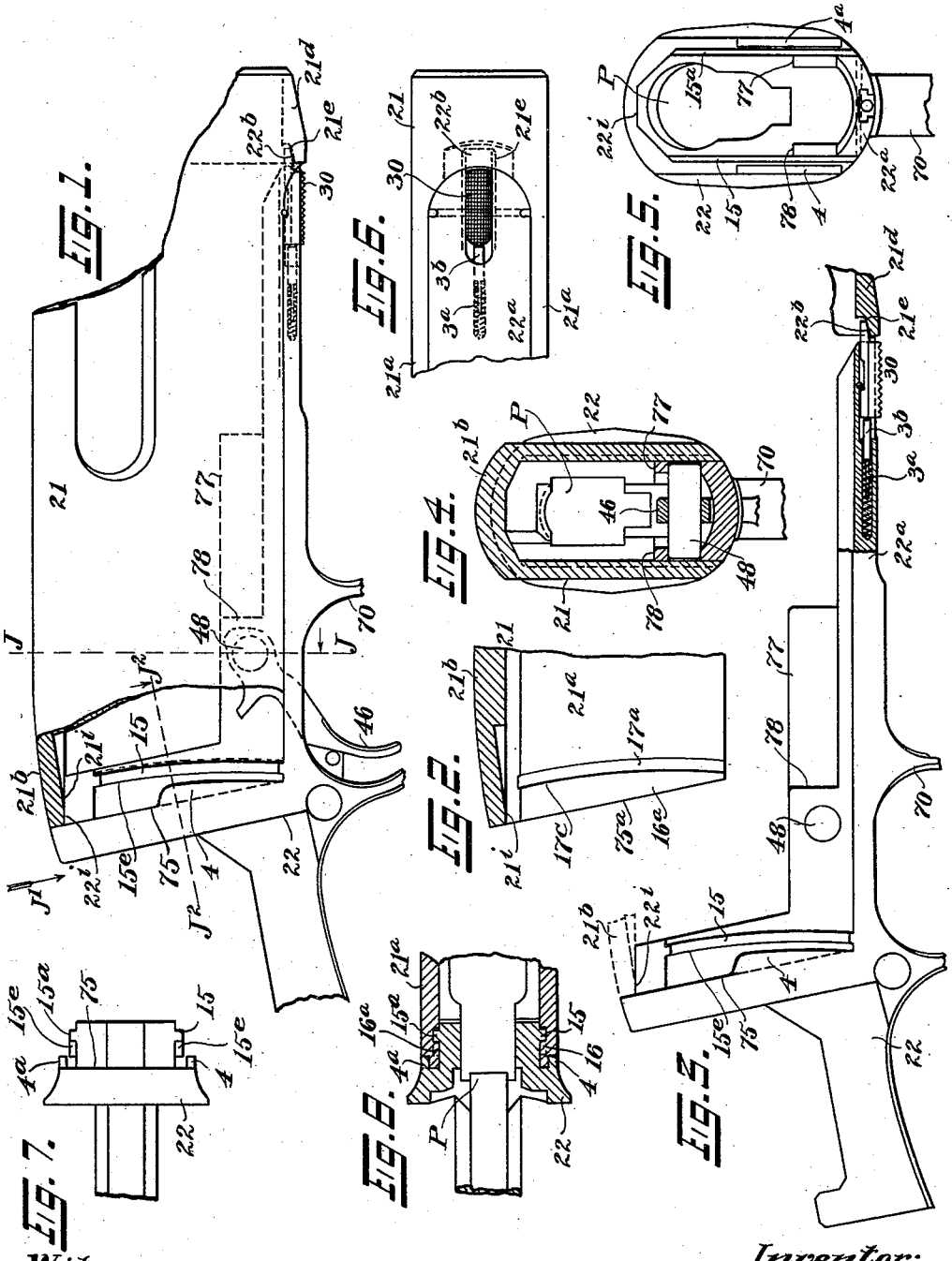

Witnesses:
Chas. E. Whiteman
H. D. Penney.

Inventor:
John D. Pedersen,
By his Att'y, F. H. Richards.