US006161680A

United States Patent [19]

Martin et al.

[11] **Patent Number: 6,161,680**

[45] **Date of Patent: Dec. 19, 2000**

[54] **SPRING CONNECTION FOR VIBRATORY CONVEYOR**

[75] Inventors: **Larry Martin**, Indiana; **William Reed**, Kitanning, both of Pa.

[73] Assignee: **FMC Corporation**, Chicago, Ill.

[21] Appl. No.: **09/416,438**

[22] Filed: **Oct. 12, 1999**

[51] **Int. Cl.**[7] **B65G 27/08**

[52] **U.S. Cl.** **198/763**; 758/759

[58] **Field of Search** 198/759, 763, 198/771, 782.1

[56] **References Cited**

U.S. PATENT DOCUMENTS

2,239,765	4/1941	Wurzbach et al.	198/763
2,664,995	1/1954	Renner .	
2,700,472	1/1955	Carrier, Jr. et al. .	
3,040,891	6/1962	Saxe .	
3,216,556	11/1965	Burgess, Jr. .	
3,348,664	10/1967	Renner	198/763 X
3,604,555	9/1971	Cowper .	
3,716,130	2/1973	Morris .	
4,260,052	4/1981	Brown .	
4,313,535	2/1982	Carmichael .	
4,356,911	11/1982	Brown .	
4,378,064	3/1983	Brown .	
4,880,106	11/1989	Falconer et al. .	
5,868,241	2/1999	Pellegrino .	
6,019,216	2/2000	Patterson	198/763 X

OTHER PUBLICATIONS

Key Technology, Inc., "Iso–Flo® "S" Conveyor" (2 pages).
Key Technology, Inc., "Iso–Flo® Smooth–Cycle™ Scale Feed Conveyor" (2 pages).
Key Technology, Inc., "Iso–Flo® Vibratory Conveyors" (2 pages).
FMC Corporation, "The First Name In Food Handling Systems" (18 pages).
FMC Corporation, "FMC Express Limited—Your Destination For Food Handling" 1996 (2 pages).
FMC Corporation, "Syntron VF Vibrating Conveyor" 1994 (4 pages).
FMC Corporation, "Link–Belt® Model BL Vibrating Conveyors" (8 pages).

Primary Examiner—James R. Bidwell
Attorney, Agent, or Firm—Rockey, Milnamow & Katz, Ltd.

[57] **ABSTRACT**

A spring connection for a vibratory conveyor having a trough member including a side wall, includes two fasteners which are welded to the side wall. The connection includes a spring connection plate with corresponding fastener holes to receive the fasteners. Nuts are threaded onto the fasteners and torqued down to clamp the connection plate onto the side wall of the trough member. The spring connection plate carries a spring bracket with a mounting hole for connection to one or more springs.
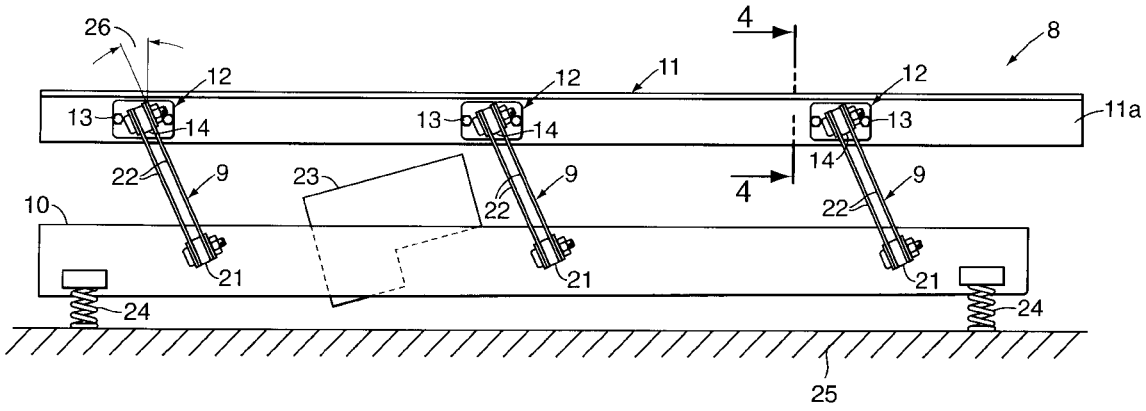
14 Claims, 3 Drawing Sheets