US011381579B2

(12) **United States Patent**
Chaula et al.

(10) **Patent No.: US 11,381,579 B2**
(45) **Date of Patent: Jul. 5, 2022**

(54) **IDENTIFYING FRAUDULENT REQUESTS FOR CONTENT**

(71) Applicant: **Oath Inc.**, New York, NY (US)

(72) Inventors: **Gaurav Chaula**, New Delhi (IN); **Kavind Aggarwal**, Delhi (IN)

(73) Assignee: **YAHOO AD TECH LLC**, Dulles, VA (US)

(*) Notice: Subject to any disclaimer, the term of this patent is extended or adjusted under 35 U.S.C. 154(b) by 305 days.

(21) Appl. No.: **16/354,289**

(22) Filed: **Mar. 15, 2019**

(65) **Prior Publication Data**

US 2020/0296118 A1 Sep. 17, 2020

(51) **Int. Cl.**
H04L 9/40 (2022.01)

(52) **U.S. Cl.**
CPC ***H04L 63/1416*** (2013.01)

(58) **Field of Classification Search**
CPC H04L 63/1416; H04L 63/1425
USPC 726/23
See application file for complete search history.

(56) **References Cited**

U.S. PATENT DOCUMENTS

7,657,594 B2 * 2/2010 Banga G06F 16/9535 709/224
7,908,645 B2 * 3/2011 Varghese G06F 21/552 715/833
8,554,912 B1 * 10/2013 Reeves G06F 21/552 455/410
8,799,076 B2 * 8/2014 Doughty G06Q 30/0261 705/14.66
9,203,860 B1 * 12/2015 Casillas G06F 21/46
9,578,499 B2 * 2/2017 Brill G06F 21/316
10,171,495 B1 * 1/2019 Bowen G06N 7/005
10,320,841 B1 * 6/2019 Allen G06N 20/00
10,796,079 B1 * 10/2020 Bradley H04L 43/0852
2012/0167162 A1 * 6/2012 Raleigh H04W 12/128 726/1
2012/0233665 A1 * 9/2012 Ranganathan G06F 21/51 726/4
2014/0373148 A1 * 12/2014 Nelms H04L 63/1441 726/23
2015/0235275 A1 * 8/2015 Shah G06Q 30/0269 705/14.66
2016/0048831 A1 * 2/2016 Ongchin G06Q 20/3276 705/44
2016/0171499 A1 * 6/2016 Meredith G06Q 20/4016 705/44

(Continued)

Primary Examiner — Badrinarayanan
Assistant Examiner — Badri Champakesan
(74) *Attorney, Agent, or Firm* — Cooper Legal Group LLC

(57) **ABSTRACT**

One or more computing devices, systems, and/or methods for determining whether requests for content are fraudulent are provided. A request for content may be received from a first device. A first user profile associated with the first device may be identified. The first user profile may comprise activity information associated with the first device, demographic information associated with the first device and/or interest information associated with the first device. A user profile database may be analyzed to identify a set of user profiles similar to the first user profile. A relevance score associated with the request for content may be generated based upon the resource, the set of user profiles and/or the first user profile. The relevance score may be compared with a threshold relevance to determine whether the request for content is fraudulent.
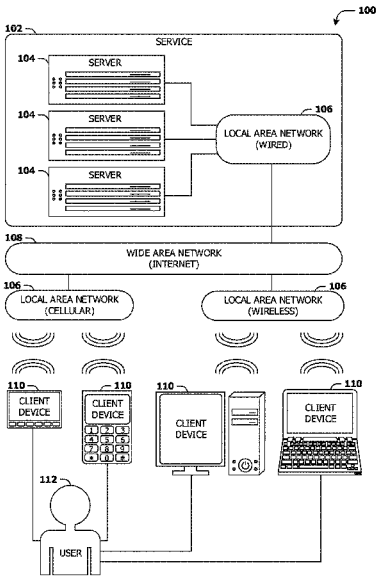
20 Claims, 13 Drawing Sheets