US011050379B1

(12) **United States Patent**
Floreancig

(10) **Patent No.: US 11,050,379 B1**
(45) **Date of Patent: Jun. 29, 2021**

(54) **CIRCUIT AND METHOD FOR START OF SINGLE PHASE TO THREE PHASE CONVERSION SYSTEM**

(71) Applicant: **Applied Industrial Motors, LLC**, Phoenix, AZ (US)

(72) Inventor: **Glen Floreancig**, Phoenix, AZ (US)

(73) Assignee: **Applied Industrial Motors, LLC**, Phoenix, AZ (US)

(*) Notice: Subject to any disclaimer, the term of this patent is extended or adjusted under 35 U.S.C. 154(b) by 0 days.

(21) Appl. No.: **16/724,629**

(22) Filed: **Dec. 23, 2019**

Related U.S. Application Data

(60) Provisional application No. 62/788,046, filed on Jan. 3, 2019.

(51) **Int. Cl.**

H02P 1/00	(2006.01)
H02P 27/00	(2006.01)
H02M 5/04	(2006.01)

(52) **U.S. Cl.**
CPC ***H02P 27/00*** (2013.01); ***H02M 5/04*** (2013.01)

(58) **Field of Classification Search**
CPC H02P 27/00; H02M 5/04; H02M 1/36
See application file for complete search history.

(56) **References Cited**

U.S. PATENT DOCUMENTS

2013/0043686 A1* 2/2013 Eitan F03D 15/10 290/55
2016/0308472 A1* 10/2016 Floreancig H02P 1/30

* cited by examiner

Primary Examiner — Karen Masih
(74) *Attorney, Agent, or Firm* — Venjuris P.C.

(57) **ABSTRACT**

A circuit for converting single phase power to three phase power and method of operation that automatically starts upon detection of a demand for three phase power from a three phase load connected to the circuit.
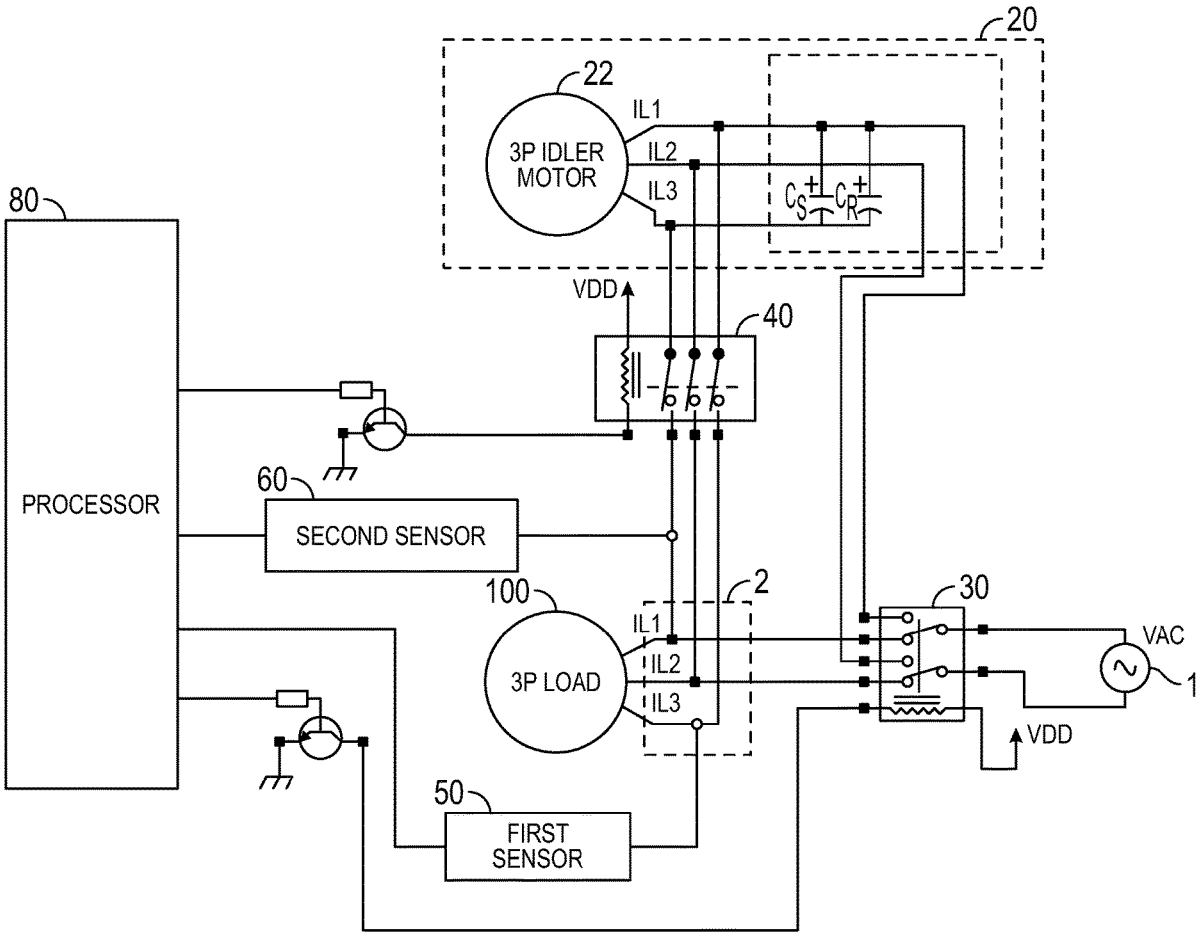
20 Claims, 5 Drawing Sheets