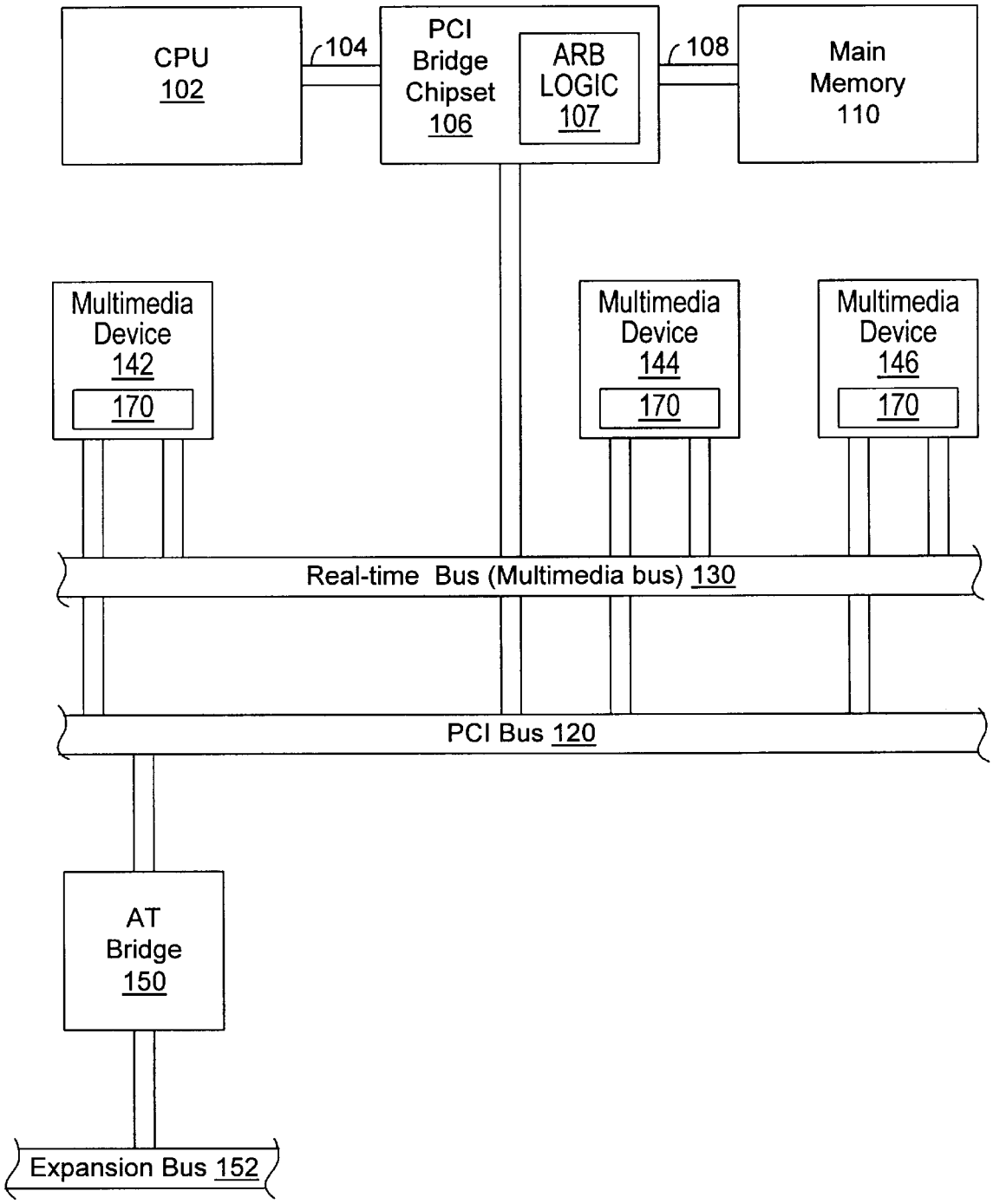
CPU
102
104
PCI
Bridge
Chipset
106
ARB
LOGIC
107
108
Main
Memory
110
Multimedia
Device
142
170
Multimedia
Device
144
170
Multimedia
Device
146
170
Real-time Bus (Multimedia bus) 130
PCI Bus 120
AT
Bridge
150
Expansion Bus 152

FIG. 1