Nov. 28, 1933. T. H. BARTH 1,936,578

SPEED CONTROLLING AND SPEED MEASURING CENTRIFUGAL MECHANISM

Original Filed July 15, 1931 2 Sheets-Sheet 1

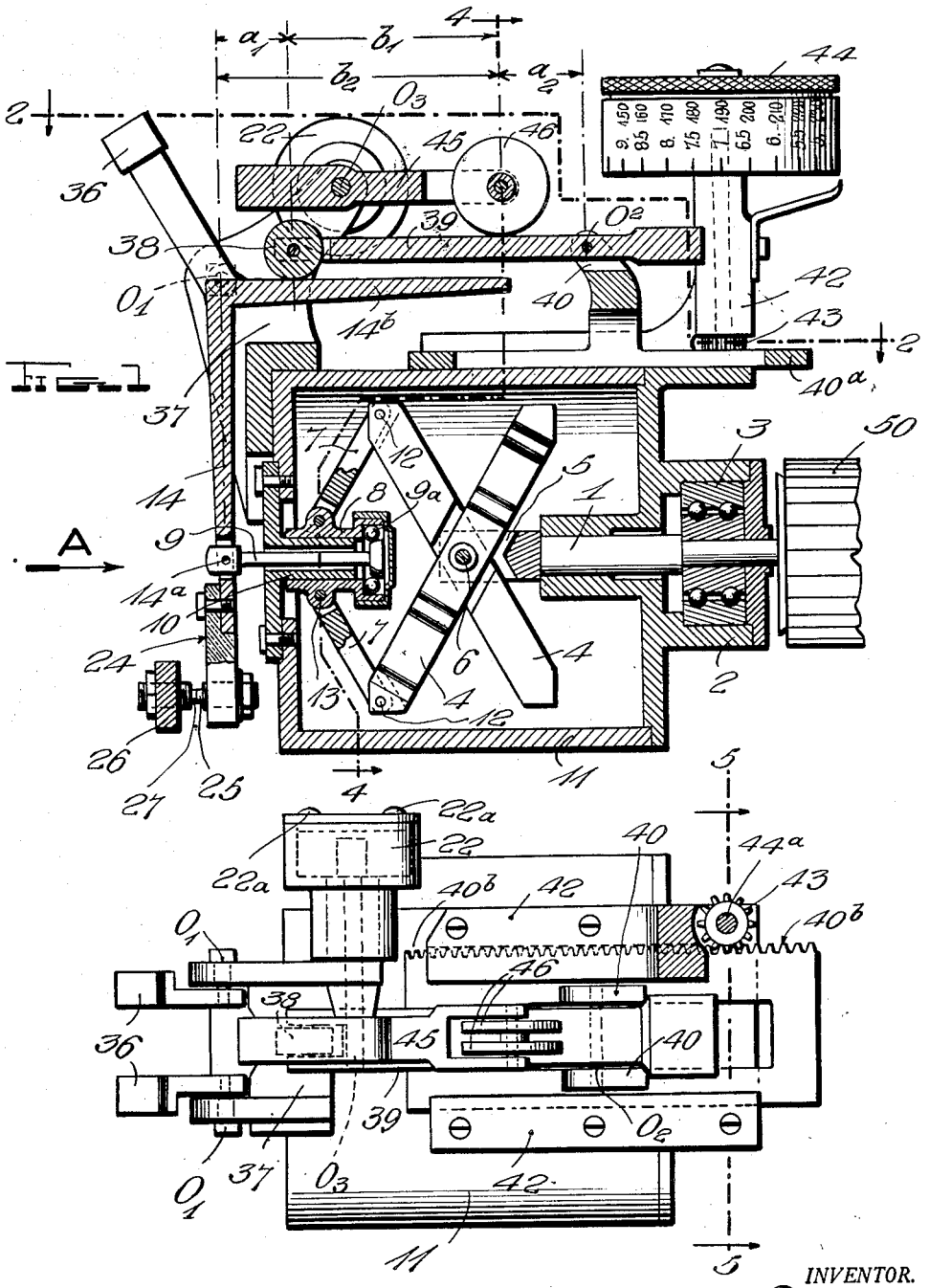

INVENTOR.
Theodore H. Barth,
BY
John C. Brady
ATTORNEY.