US008434278B1

(12) **United States Patent**
Dueck et al.

(10) **Patent No.: US 8,434,278 B1**
(45) **Date of Patent: May 7, 2013**

(54) **STORAGE BIN SUPPORT SYSTEM**

(75) Inventors: **Raymond Dueck**, Saint Adolphe (CA); **Saad Farag**, Manitoba (CA)

(73) Assignee: **V-Bins.com GP Inc**, Morris (CA)

(*) Notice: Subject to any disclaimer, the term of this patent is extended or adjusted under 35 U.S.C. 154(b) by 308 days.

(21) Appl. No.: **12/831,817**

(22) Filed: **Jul. 7, 2010**

(51) **Int. Cl.**
E05F 11/00 (2006.01)

(52) **U.S. Cl.**
USPC **52/194**; 52/197; 52/652.1; 52/653.1; 52/192; 220/638; 220/636; 220/635; 220/634

(58) **Field of Classification Search** 52/194, 52/197, 652.1, 653.1, 192, 195, 196; 220/638, 220/636, 635, 634
See application file for complete search history.

(56) **References Cited**

U.S. PATENT DOCUMENTS

521,951	A	*	6/1894	Fallis	52/197
1,632,103	A	*	6/1927	Venable	52/194
1,715,853	A	*	6/1929	Madsen	52/64
1,742,709	A	*	1/1930	Kenigsberg	52/194
1,754,516	A	*	4/1930	Johnson	52/194
1,760,094	A	*	5/1930	Tolman, Jr.	222/502
1,913,174	A	*	6/1933	Stephenson	52/234
2,567,958	A	*	9/1951	Mummert	220/567
2,943,752	A	*	7/1960	Platt	414/323
D195,828	S	*	8/1963	Stapleton	D30/131
3,248,024	A	*	4/1966	Keathly	222/459
3,712,002	A	*	1/1973	Hillinger et al.	52/63
3,742,664	A	*	7/1973	Reding	52/194
D235,340	S	*	6/1975	Mize	D23/205
D249,050	S		8/1978	Friesen	
4,218,859	A	*	8/1980	Sams	52/194
4,338,752	A	*	7/1982	Stanelle	52/194
5,490,479	A	*	2/1996	Shalev	119/51.01
5,570,547	A	*	11/1996	Webb et al.	52/194
5,586,678	A	*	12/1996	Rosch et al.	220/263
8,201,520	B2	*	6/2012	Meritt	119/53
2010/0139185	A1	*	6/2010	Neighbors	52/194

* cited by examiner

Primary Examiner — William Gilbert
Assistant Examiner — Alp Akbasli
(74) *Attorney, Agent, or Firm* — Neustel Law Offices

(57) **ABSTRACT**

A storage bin support system for providing a leg structure to better support the storage bin and allow for easier access underneath. The storage bin support system generally includes a bin for holding the particulate material, wherein the bin includes a roof, sidewalls, and a base, and wherein the roof includes an inlet for filling the bin and wherein the base includes an outlet for emptying the bin, and a supporting framework for supporting the bin above a ground surface in an upright position, wherein supporting framework includes an outer framework and an inner framework interconnecting the outer framework with the base. The outer framework is spaced along an outer perimeter of the bin and the inner framework includes a plurality of upper angled supports comprising an upper end and optionally a plurality of lower angled supports comprising a lower end.
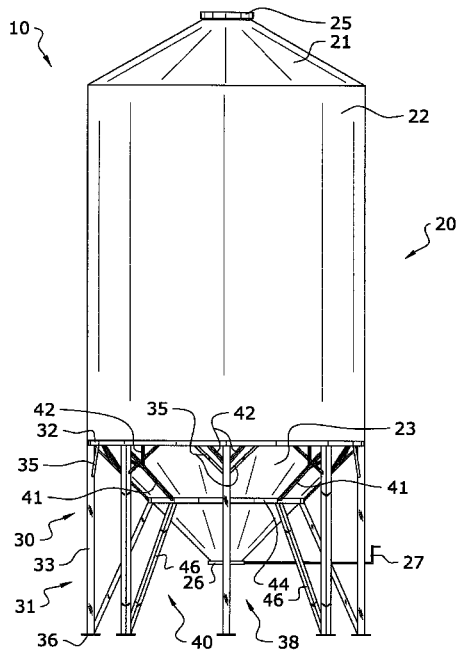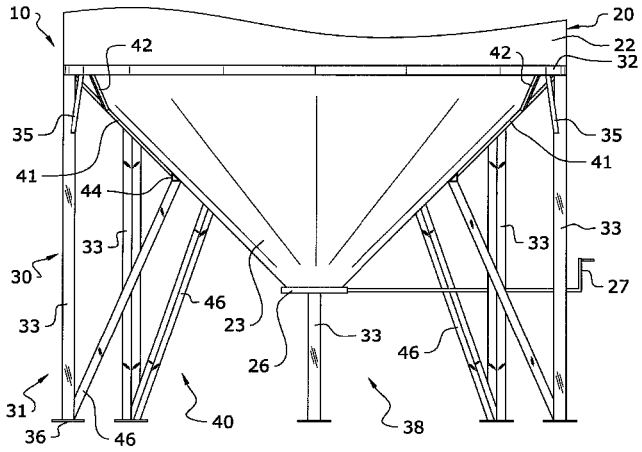
15 Claims, 5 Drawing Sheets