Oct. 7, 1947. C. L. NORDEN ET AL 2,428,678

BOMB SIGHT

Filed May 27, 1930 11 Sheets-Sheet 1

Fig. 1

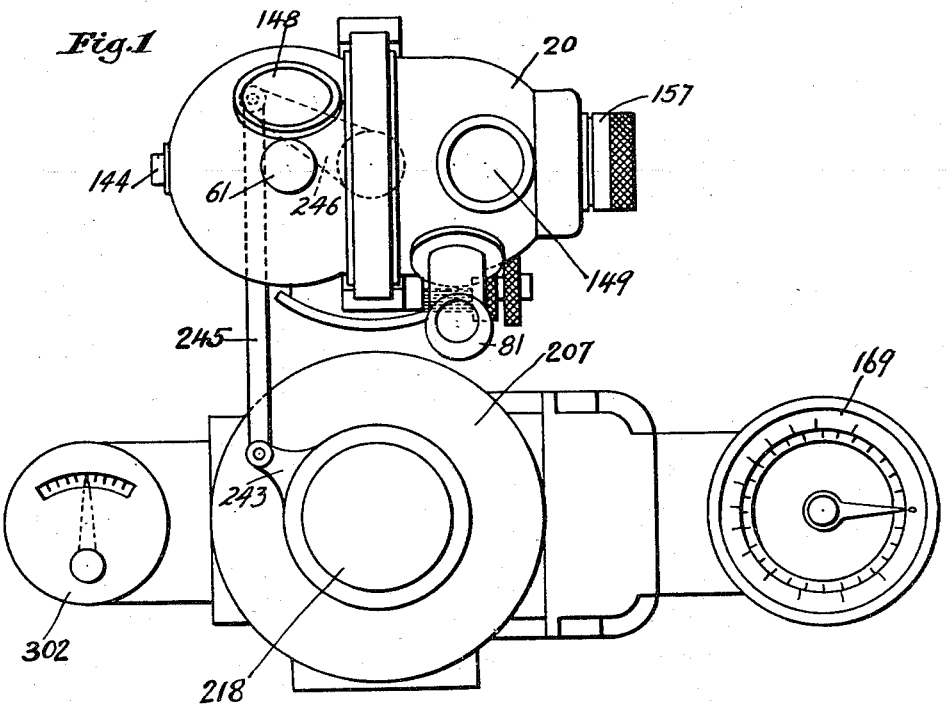

Fig. 2

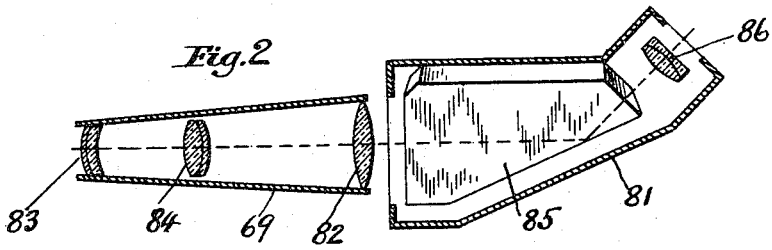

Fig. 9

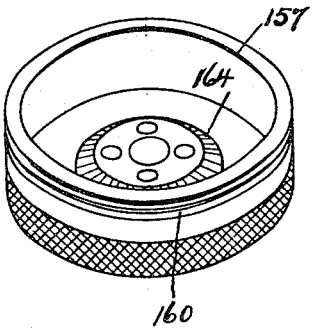

Fig. 8

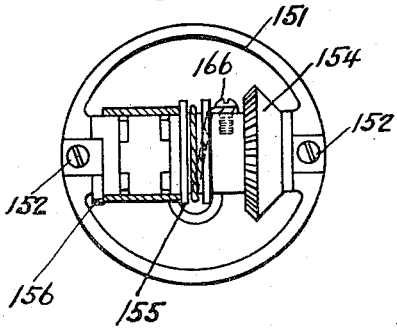

Inventors
CARL L. NORDEN
THEODORE H. BARTH

BY Harold Todd
ATTORNEY