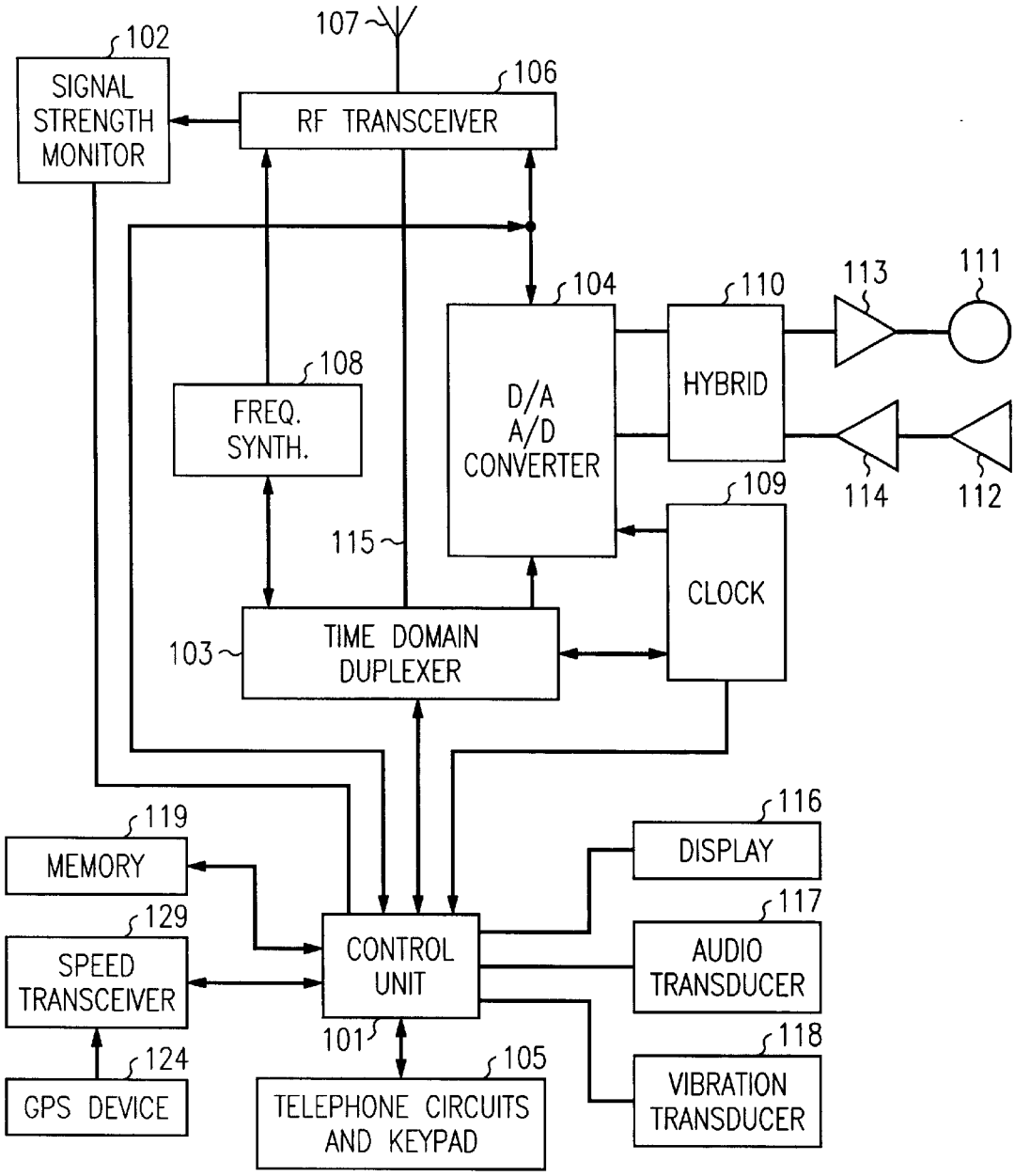
102
SIGNAL STRENGTH MONITOR
107
106
RF TRANSCEIVER
104
110
113
111
108
FREQ. SYNTH.
D/A A/D CONVERTER
HYBRID
109
114
112
115
CLOCK
103
TIME DOMAIN DUPLEXER
119
MEMORY
116
DISPLAY
129
SPEED TRANSCEIVER
CONTROL UNIT
117
AUDIO TRANSDUCER
101
118
124
GPS DEVICE
105
TELEPHONE CIRCUITS AND KEYPAD
VIBRATION TRANSDUCER

FIG. 1