June 6, 1950 K. A. KAIL 2,510,578

AVIATION TRAINER

Filed May 28, 1946 7 Sheets-Sheet 1

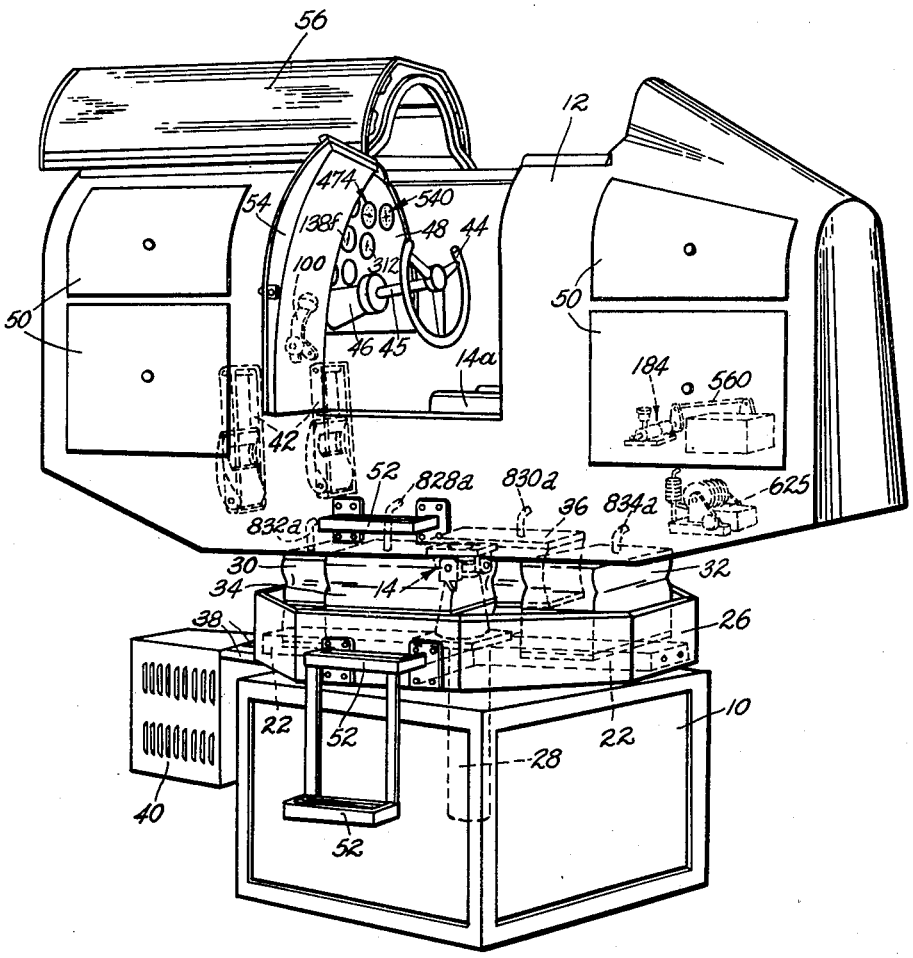


FIG. 1

KARL A. KAIL
INVENTOR.
BY Donald T. Hilker
Philip S. Hopkins
ATTORNEYS