(No Model.) 2 Sheets—Sheet 1.

H. C. REAGAN, Jr.

APPLICATION OF SOLAR HEAT TO THERMO BATTERIES.

No. 588,177. Patented Aug. 17, 1897.

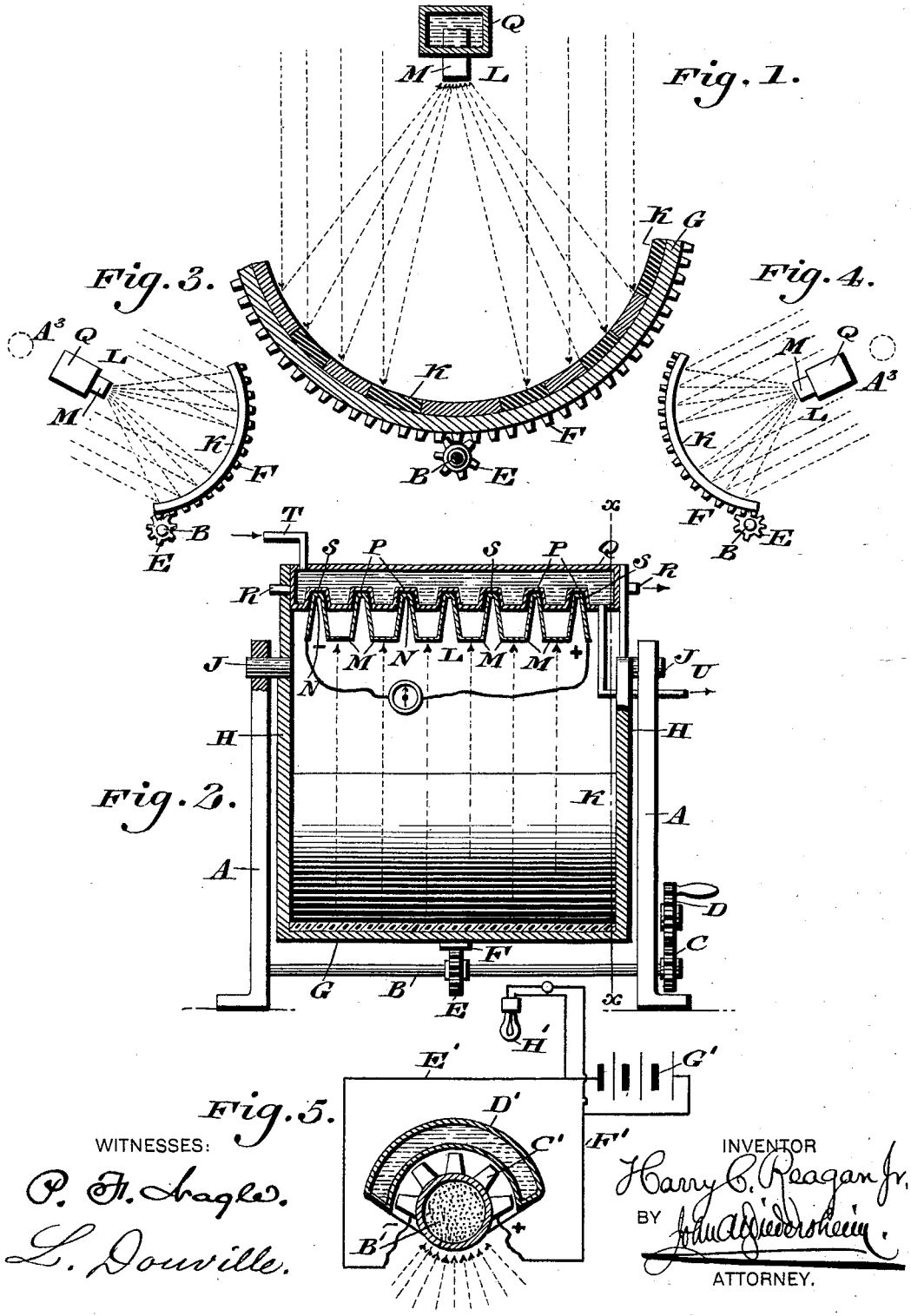

WITNESSES:

P. H. Eagles.

L. Douville.

INVENTOR

Harry C. Reagan Jr.

BY John A. Wiedersheim.

ATTORNEY.

THE NORRIS PETERS CO., PHOTO-LITHO., WASHINGTON, D. C.