US008585677B2

(12) **United States Patent**
Albrechtsen et al.

(10) **Patent No.: US 8,585,677 B2**
(45) **Date of Patent: Nov. 19, 2013**

(54) **LAMINAR INJECTION APPARATUS AND METHOD**

(75) Inventors: **Nathan B. Albrechtsen**, Provo, UT (US); **Larry L. Howell**, Orem, UT (US); **Spencer P. Magleby**, Provo, UT (US)

(73) Assignee: **Brigham Young University**, Provo, UT (US)

(*) Notice: Subject to any disclaimer, the term of this patent is extended or adjusted under 35 U.S.C. 154(b) by 12 days.

(21) Appl. No.: **13/239,302**

(22) Filed: **Sep. 21, 2011**

(65) **Prior Publication Data**

US 2012/0245557 A1 Sep. 27, 2012

Related U.S. Application Data

(60) Provisional application No. 61/403,758, filed on Sep. 21, 2010.

(51) **Int. Cl.**

A61M 31/00	(2006.01)
A61M 5/00	(2006.01)
A61M 5/32	(2006.01)

(52) **U.S. Cl.**

USPC **604/506**; 604/187; 604/216; 604/192

(58) **Field of Classification Search**

USPC 604/506, 187, 216, 192, 500

See application file for complete search history.

(56) **References Cited**

U.S. PATENT DOCUMENTS

4,340,048	A	7/1982	Eckenhoff	
4,886,499	A	12/1989	Cirelli et al.	
5,527,288	A	6/1996	Gross et al.	
5,814,020	A	9/1998	Gross	
5,858,001	A	1/1999	Tsals et al.	
5,931,814	A	8/1999	Alex et al.	
5,957,895	A	9/1999	Sage et al.	
5,997,501	A	12/1999	Gross et al.	
6,979,316	B1	12/2005	Rubin et al.	
6,983,924	B2	1/2006	Howell et al.	
7,628,770	B2	12/2009	Ethelfeld	
2003/0236502	A1	12/2003	De La Serna	
2006/0247579	A1 *	11/2006	Friedman	604/197
2008/0039794	A1 *	2/2008	Kornerup et al.	604/136
2009/0082727	A1	3/2009	Moeller et al.	
2010/0278785	A1	11/2010	Schwaiger et al.	

* cited by examiner

Primary Examiner — Kevin C Sirmons

Assistant Examiner — Imani Hayman

(74) *Attorney, Agent, or Firm* — Utah Valley Patent; Steve McDaniel

(57) **ABSTRACT**

A laminar injection apparatus may include a slider layer, a needle flexibly coupled to the slider layer, a medication reservoir in fluid communication with the needle, and a needle guiding layer comprising an aperture for deflecting the needle from a substantially horizontal orientation to a substantially vertical orientation in response to moving the slider layer relative to the needle guiding layer. One or more spring layers may extend the laminar structure into an extended laminar structure. The needle may be thrust into a subject by compressing the extended laminar structure and causing the needle to protrude from the structure and penetrate a subject. In response to the compressive force on the laminar stack, medication may be forced from the medication reservoir through the needle and into the subject.
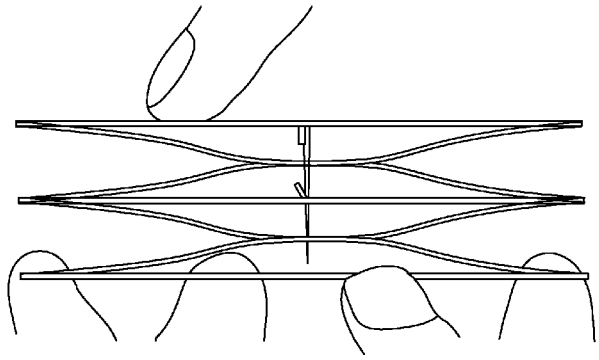
17 Claims, 4 Drawing Sheets