July 31, 1923. 1,463,677

A. L. DAVIS

AIRCRAFT LAMP

Filed Aug. 8, 1922 2 Sheets-Sheet 1

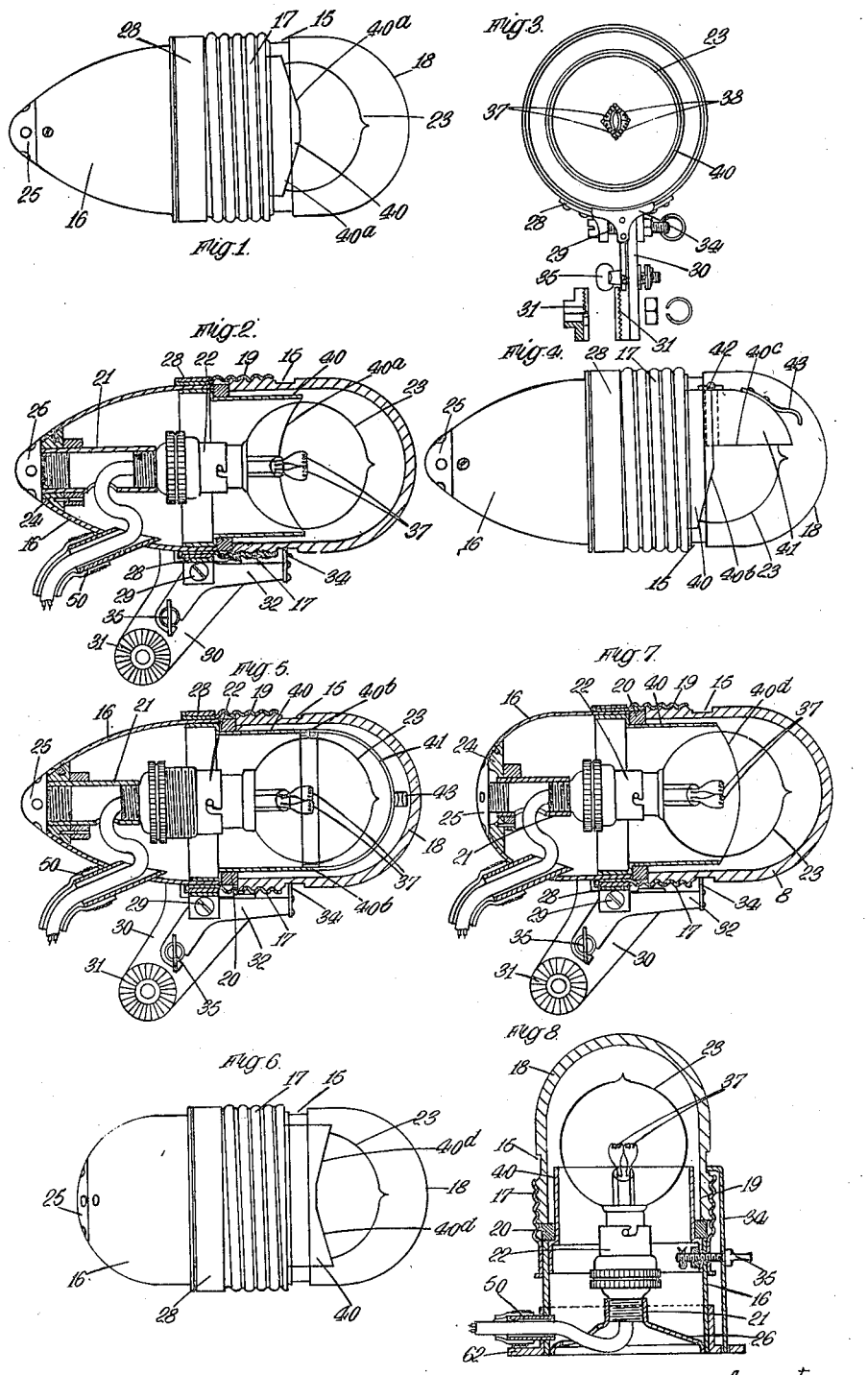

Inventor
Albert Louis Davis
by Pennie, Davis, Marvin & Edmonds
Attorneys