Oct. 27, 1936. W. G. GRIMES 2,058,977

POSITION LIGHT
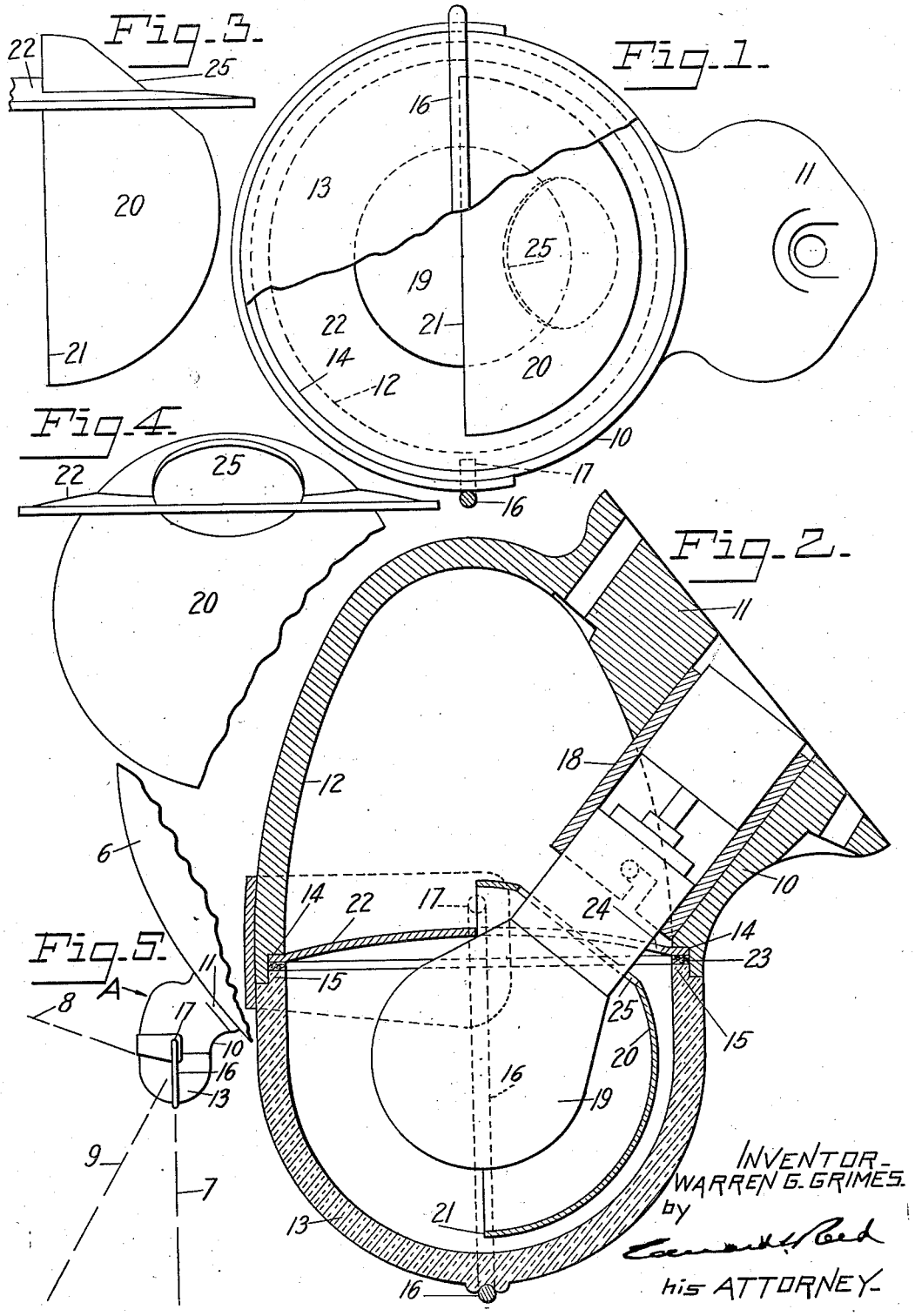
Filed Feb. 4, 1935