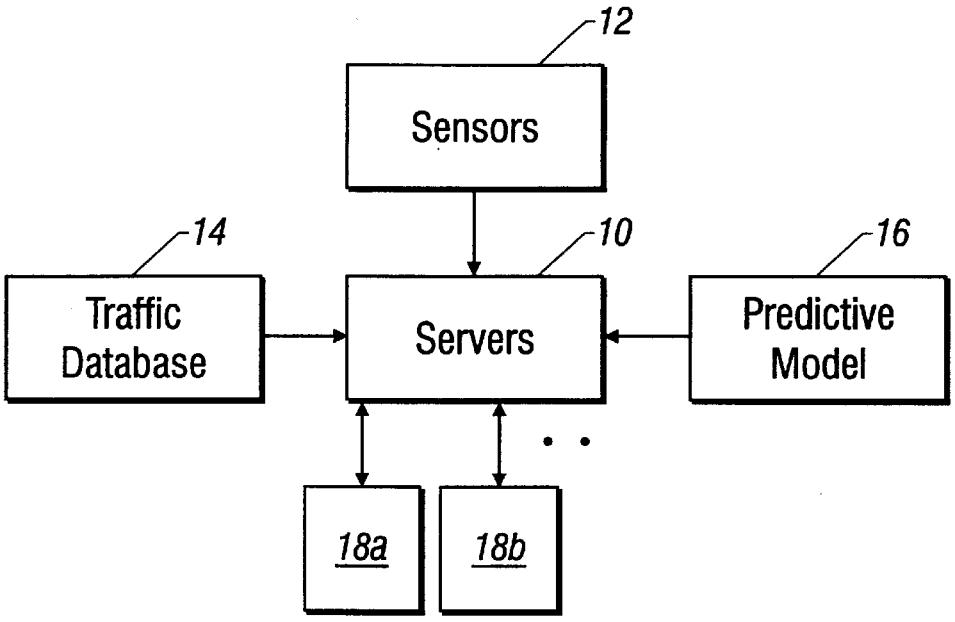
12
Sensors
14
Traffic Database
10
Servers
16
Predictive Model
18a
18b

FIG. 1

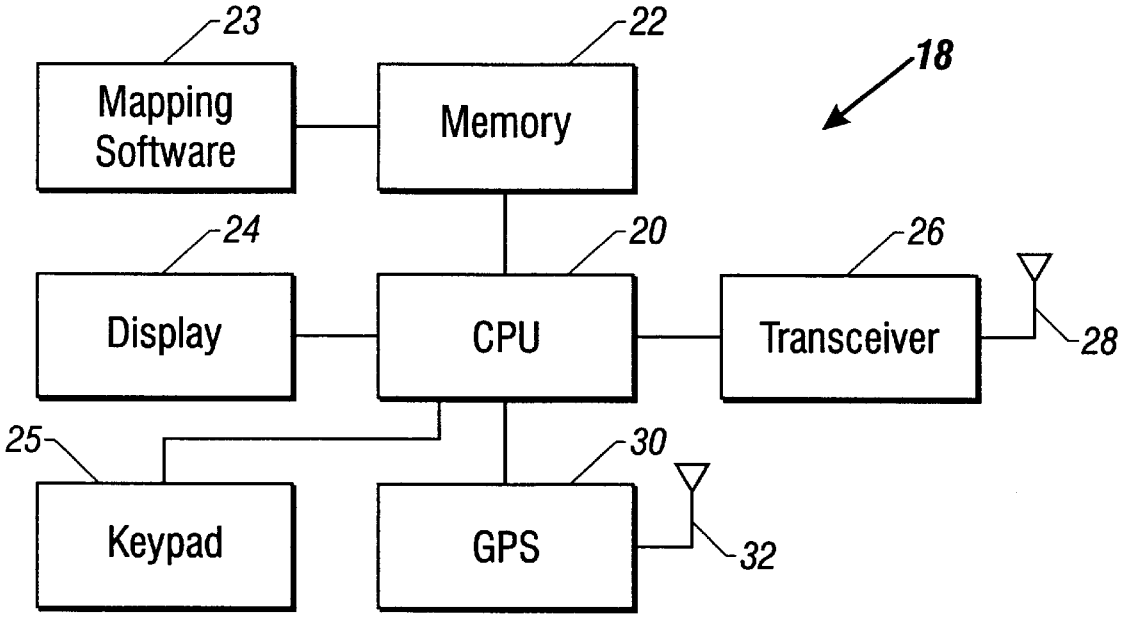
23
Mapping Software
22
Memory
18
24
Display
20
CPU
26
Transceiver
28
25
Keypad
30
GPS
32

FIG. 2