No. 646,477.

Patented Apr. 3, 1900.

R. E. TWYFORD.

DRIVING GEAR FOR MOTOR CARRIAGES.

(Application filed July 7, 1898. Renewed Sept. 11, 1899.)

(No Model.)

2 Sheets—Sheet 2.

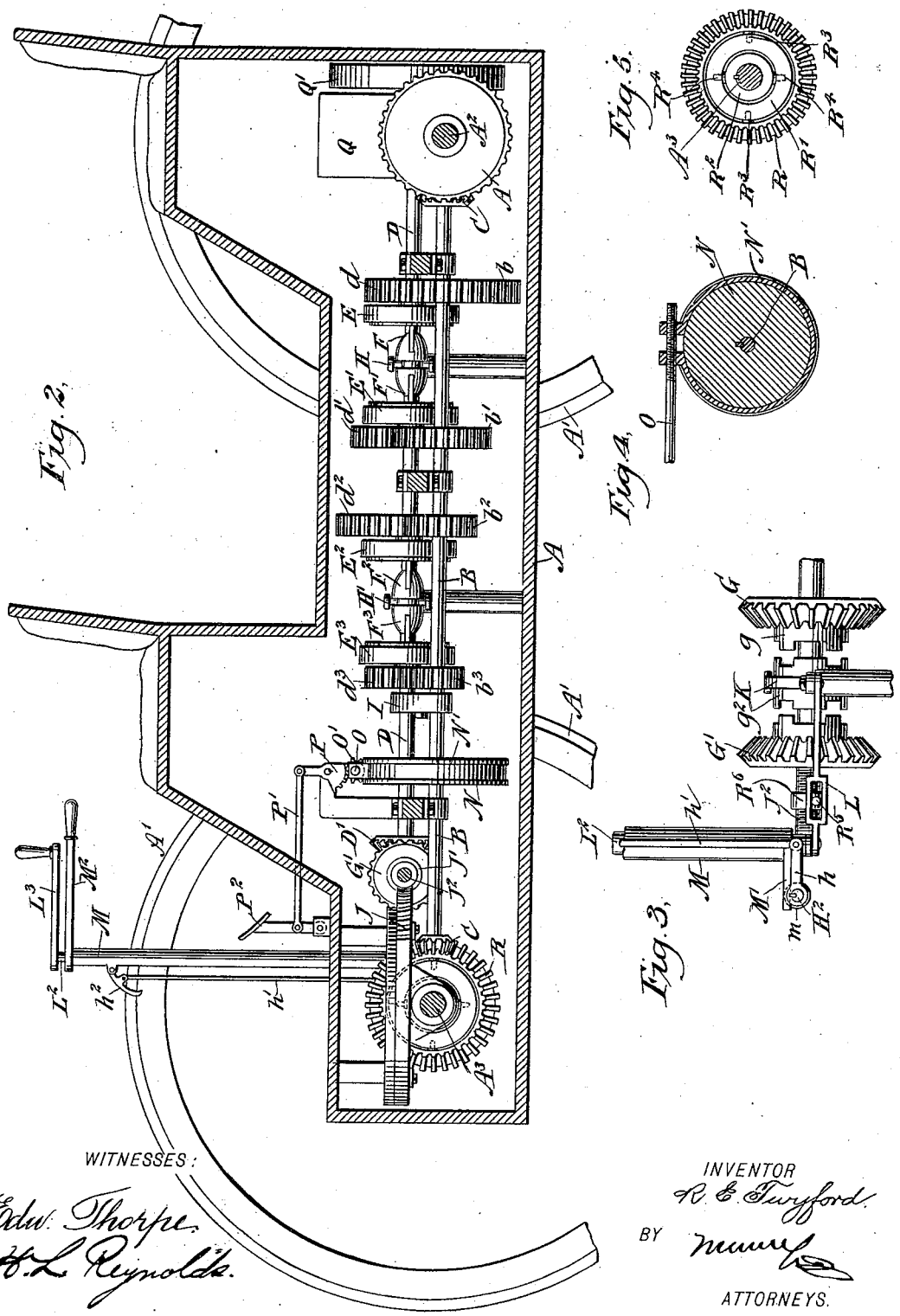

WITNESSES:

Edw. Thorpe.

H. L. Reynolds.

INVENTOR

R. E. Twyford.

BY

ATTORNEYS.

THE NORRIS PETERS CO., PHOTO-LITHO., WASHINGTON, D. C.