Nov. 28, 1933. T. H. BARTH 1,936,577

SPEED CONTROLLING AND SPEED MEASURING CENTRIFUGAL MECHANISM

Filed July 15, 1931 3 Sheets-Sheet 1

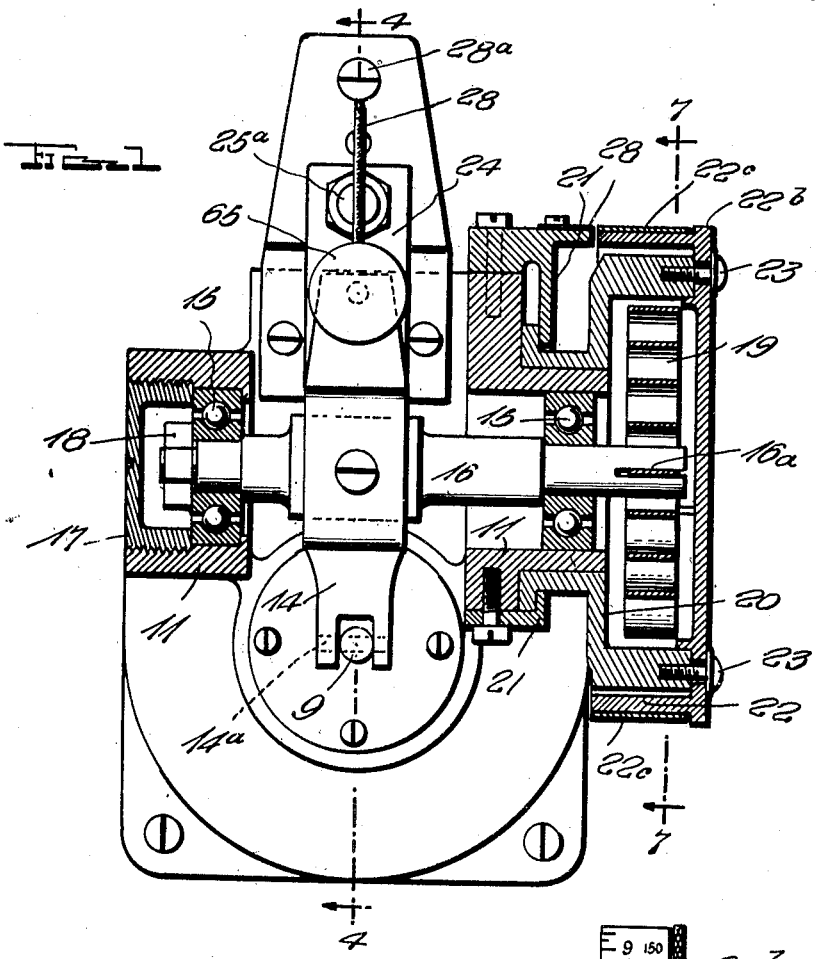

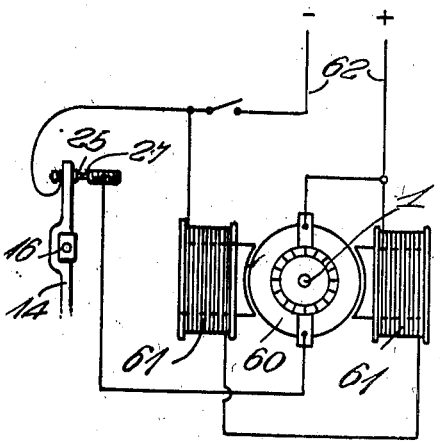

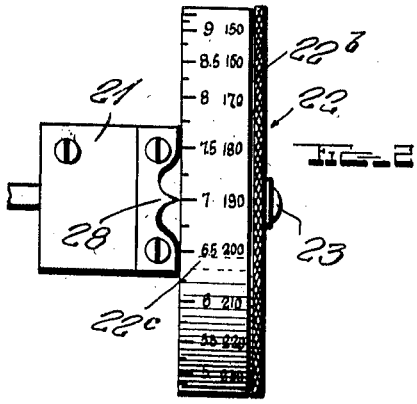

INVENTOR.
Theodore H. Barth,
BY John A. Grady
ATTORNEY