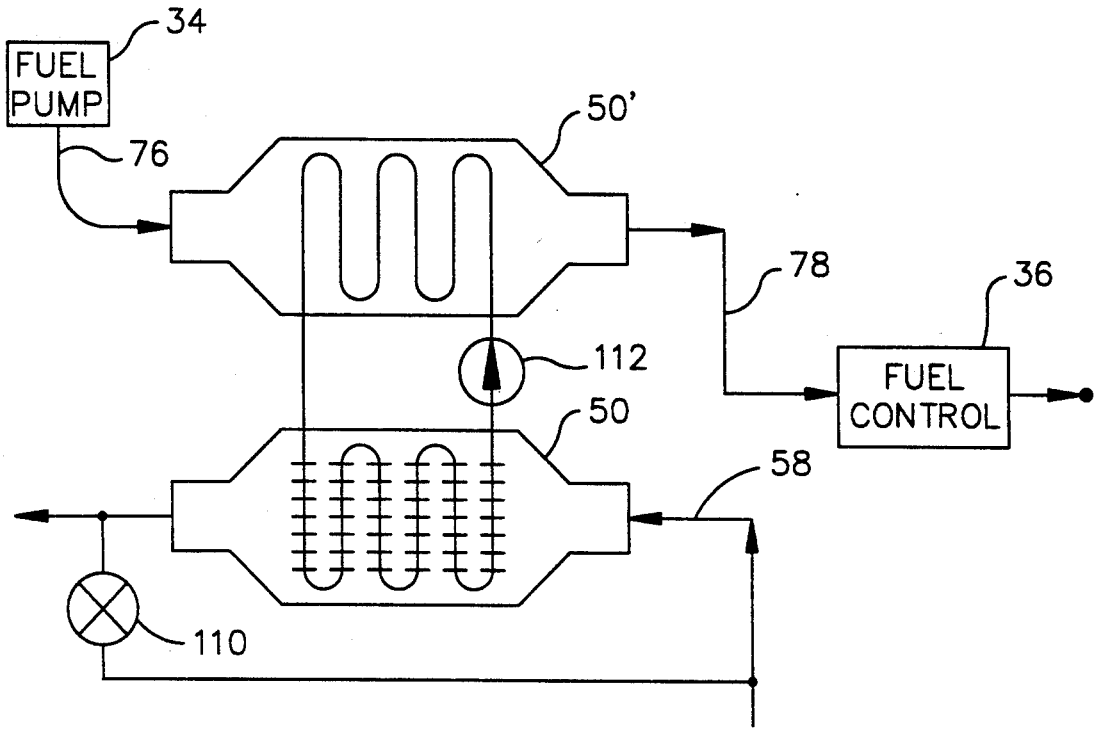
34
FUEL PUMP
76
50'
78
36
112
FUEL CONTROL
50
58
110

FIG. 3

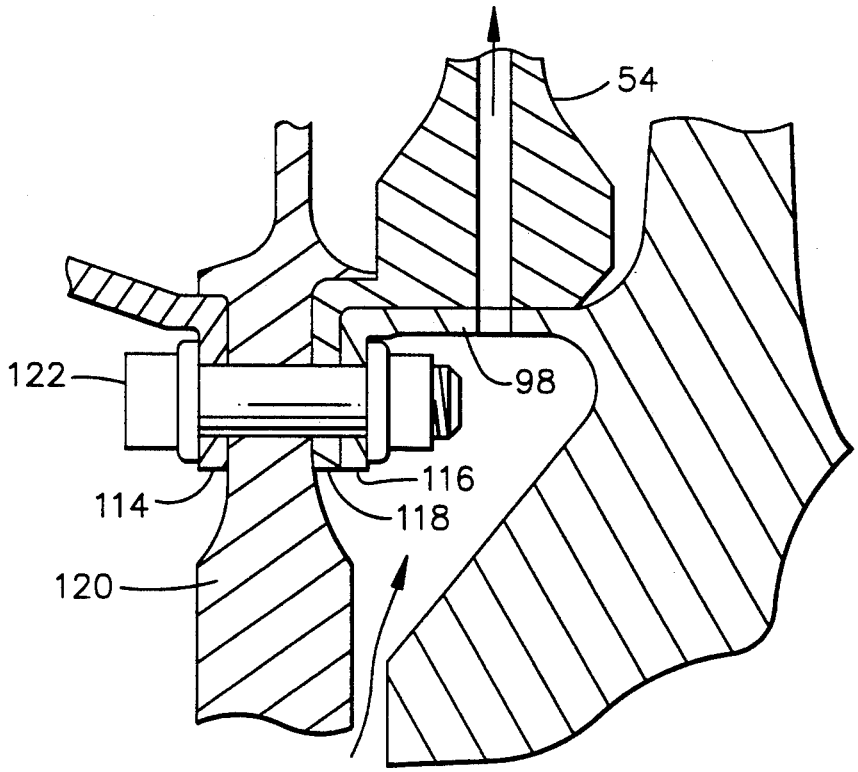
54
122
98
116
114
118
120

FIG. 5