US007694676B2

(12) **United States Patent**
Wachtel

(10) **Patent No.: US 7,694,676 B2**
(45) **Date of Patent: Apr. 13, 2010**

(54) **DRY POWDER INHALER**

(75) Inventor: **Herbert Wachtel**, Ingelheim (DE)

(73) Assignee: **Boehringer Ingelheim GmbH**, Ingelheim am Rhein (DE)

(*) Notice: Subject to any disclaimer, the term of this patent is extended or adjusted under 35 U.S.C. 154(b) by 689 days.

(21) Appl. No.: **11/113,091**

(22) Filed: **Apr. 22, 2005**

(65) **Prior Publication Data**

US 2006/0237016 A1 Oct. 26, 2006

(51) **Int. Cl.**
A61M 15/00 (2006.01)
A61M 16/00 (2006.01)

(52) **U.S. Cl.** **128/203.21**; 128/203.15

(58) **Field of Classification Search** 128/200.24, 128/203.15, 203.14, 203.19, 203.21; 222/80, 222/153.1, 189.06, 472; 206/528, 532, 531, 206/530, 534
See application file for complete search history.

(56) **References Cited**

U.S. PATENT DOCUMENTS

3,724,459	A *	4/1973	Congro	.....	128/203.22
4,860,740	A *	8/1989	Kirk et al.	.....	128/203.15
5,575,280	A *	11/1996	Gupte et al.	.....	128/203.15
5,685,294	A *	11/1997	Gupte et al.	.....	128/203.15
5,685,894	A	11/1997	Bowerman et al.		
5,787,881	A *	8/1998	Chawla	.....	128/203.15
5,947,118	A *	9/1999	Hochrainer et al.	....	128/203.15
6,055,980	A *	5/2000	Mecikalski et al.	....	128/203.15
6,182,655	B1 *	2/2001	Keller et al.	.....	128/203.15
6,273,084	B1 *	8/2001	Frid	.....	128/200.23
6,273,085	B1 *	8/2001	Eisele et al.	.....	128/203.15
6,328,034	B1 *	12/2001	Eisele et al.	.....	128/203.15
6,367,473	B1 *	4/2002	Kafer	.....	128/203.21
7,252,087	B2 *	8/2007	Wachtel	.....	128/203.21
2003/0070679	A1	4/2003	Hochrainer et al.		
2004/0094146	A1 *	5/2004	Schiewe et al.	.....	128/200.11
2007/0221211	A1 *	9/2007	Sagalovich	.....	128/200.15

FOREIGN PATENT DOCUMENTS

SU	1733008	A1	11/1989
WO	02-098874	A2	12/2002
WO	WO 03/084502	A1 *	10/2003

* cited by examiner

Primary Examiner—Steven O Douglas
Assistant Examiner—Annette F Dixon
(74) *Attorney, Agent, or Firm*—Michael P. Morris; Mary-Ellen M. Devlin; David L. Kershner

(57) **ABSTRACT**

An inhaler for inhaling powdered pharmaceutical compositions from capsules includes: a lower part; a plate which can be latched to the lower part and with which the lower part can be closed off; a capsule holder for receiving the capsules, this holder being adapted to be lowered into the lower part; a mouthpiece latchable to the plate; a lid which covers the mouthpiece in a closed position and latches it by means of a closure element, the lower part, the plate, the mouthpiece and the lid being hinged together by means of a single joint; and an actuating member which can be moved out a resting position and thereby interacts with at least one pin which can be made to pierce the capsule holder.
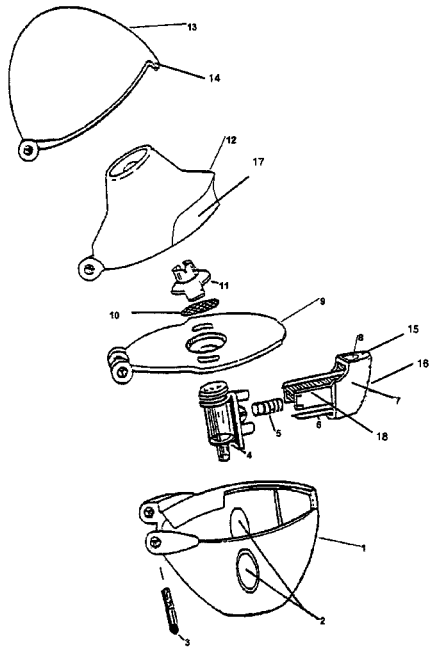
16 Claims, 3 Drawing Sheets