No. 684,176. Patented Oct. 8, 1901.

H. A. BLANCHARD.

HAT SEWING MACHINE.

(Application filed Mar. 8, 1900. Renewed Feb. 28, 1901.)

(No Model.) 3 Sheets—Sheet 2.

Fig. 4.

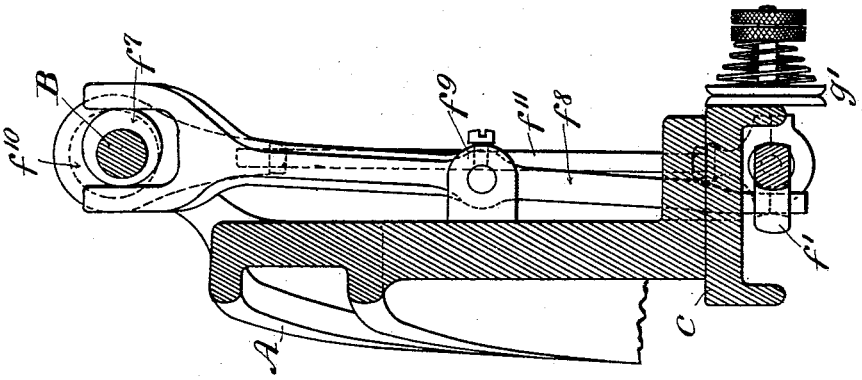

Fig. 3.

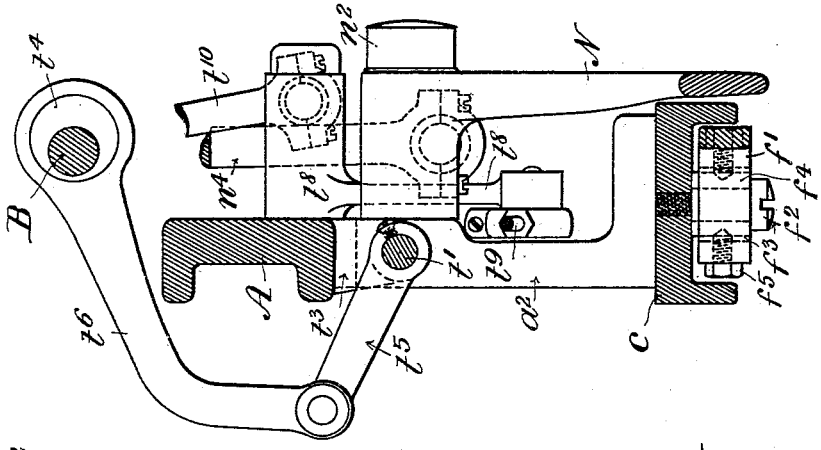

Fig. 2.

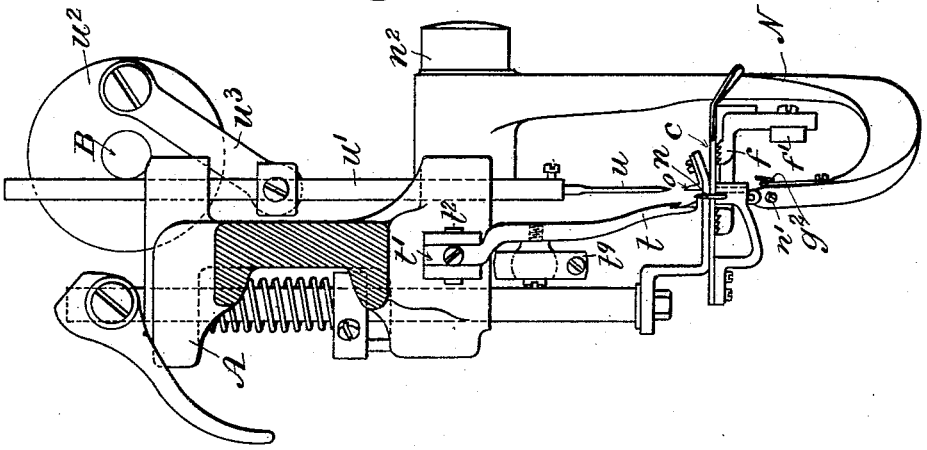

Witnesses:
Hermann W. Bormann
M. Bormann.

Inventor:
Helen A. Blanchard
By Hermann Bormann
Att'y.

THE NORRIS PETERS CO., PHOTO-LITHO., WASHINGTON, D. C.