Sept. 4, 1928. 1,683,376

J. A. WILLIAMS ET AL

IGNITION APPARATUS

Filed Jan. 7, 1924 2 Sheets-Sheet 1

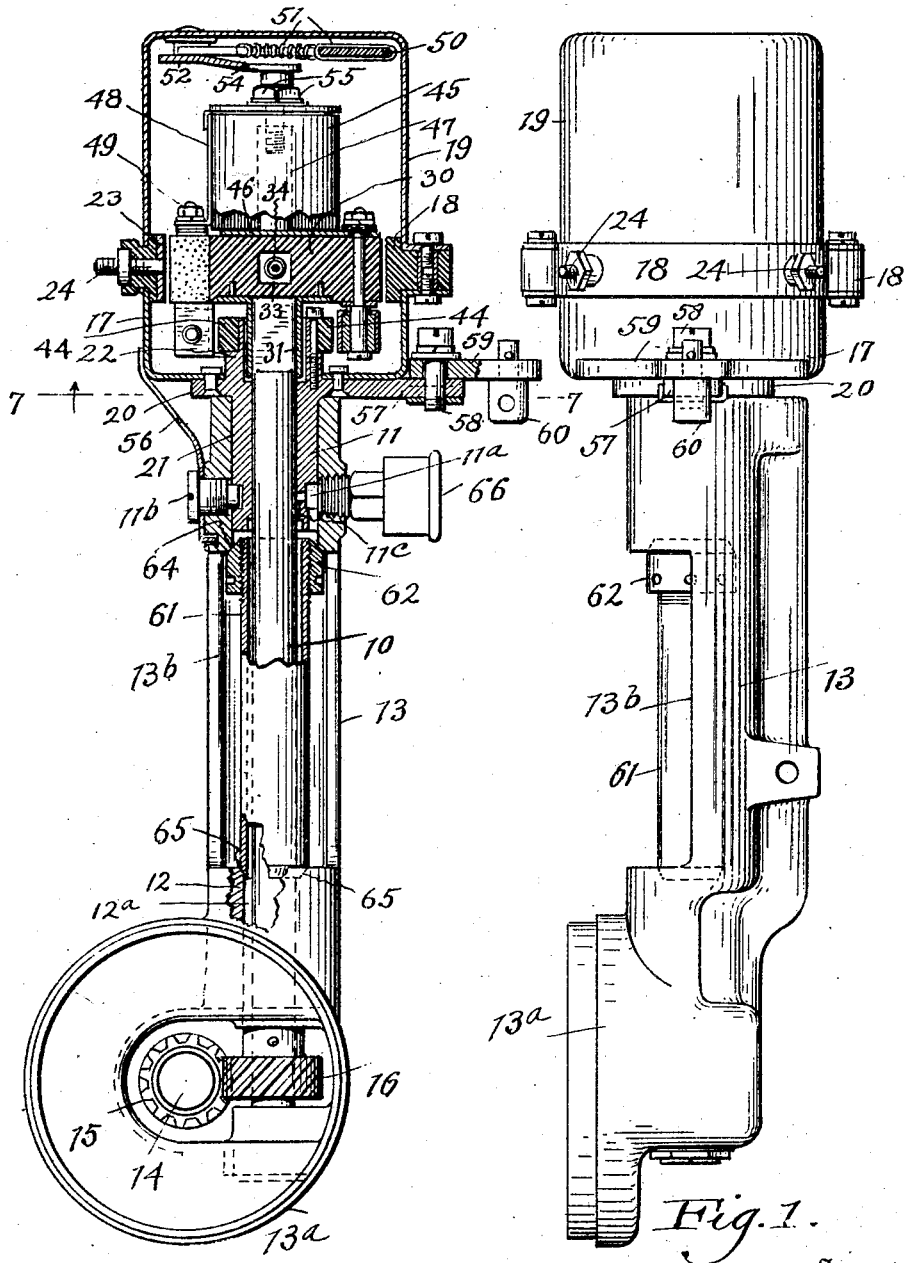

Fig. 2.

Fig. 1.

Inventors
and. Joseph A. Williams
Albert G. Karkau:
By Thurston Kurz & Hudson
Attorneys