FIG 1

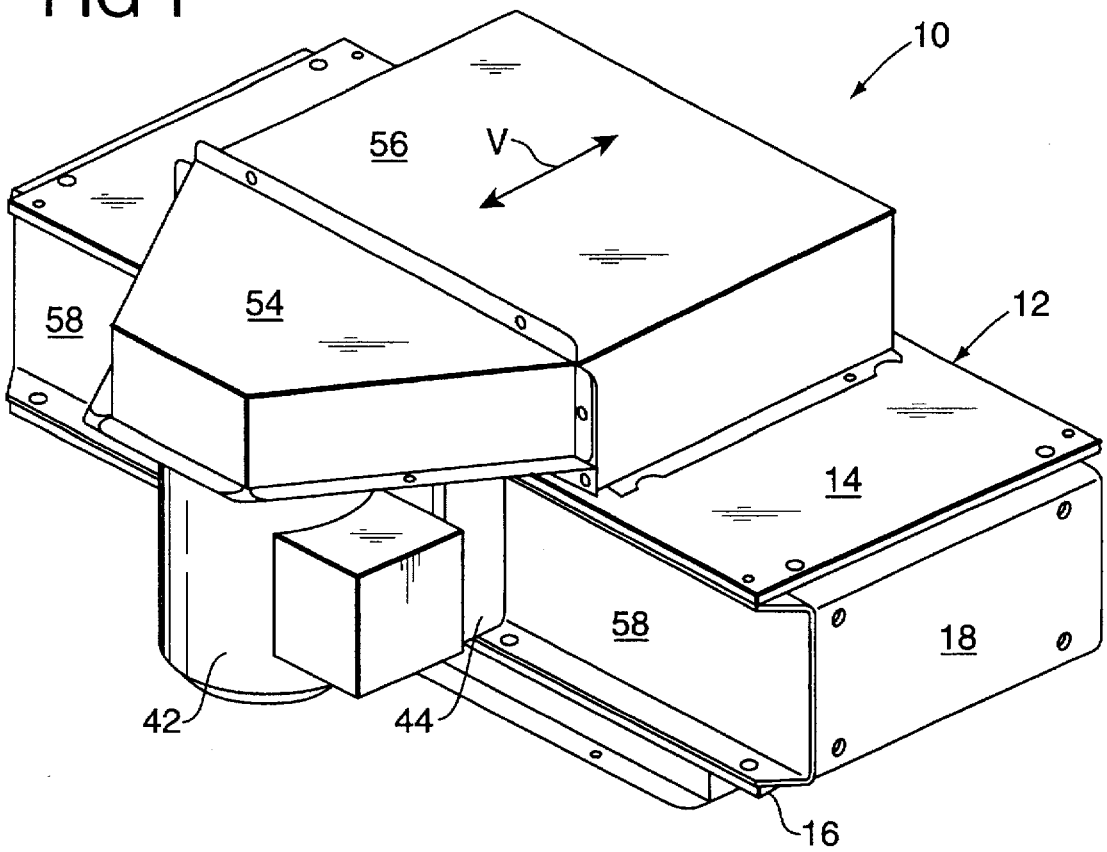
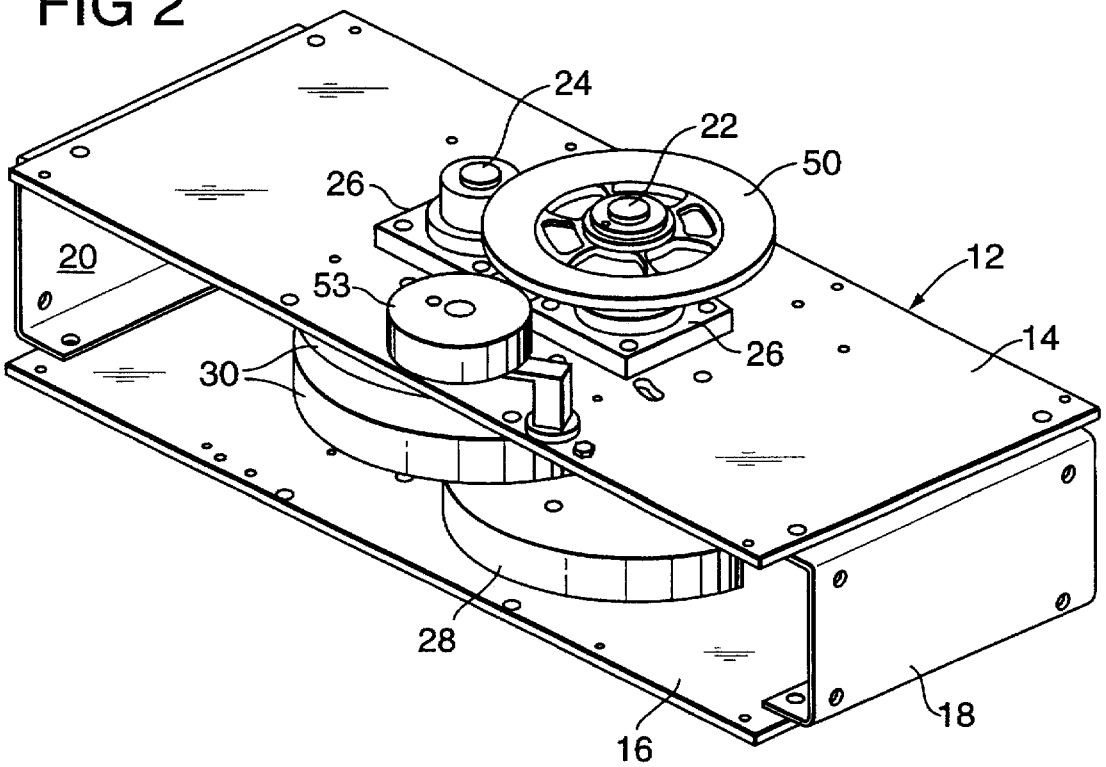
FIG 2