US005762176A

United States Patent [19]

Patterson et al.

[11] Patent Number: 5,762,176

[45] Date of Patent: Jun. 9, 1998

[54] **BELT DRIVEN VIBRATORY APPARATUS**

[75] Inventors: **Harold E. Patterson**, Indiana; **Paul I. Sleppy**, Penn Run, both of Pa.

[73] Assignee: **FMC Corporation**, Chicago, Ill.

[21] Appl. No.: **747,159**

[22] Filed: **Nov. 8, 1996**

[51] **Int. Cl.**[6] **B65B 27/20**

[52] **U.S. Cl.** **198/770**; 198/766

[58] **Field of Search** 198/750.1, 752.1, 198/766, 770

[56] **References Cited**

U.S. PATENT DOCUMENTS

3,053,379	9/1962	Roder et al.	198/220
3,882,996	5/1975	Musschoot	198/220
4,196,637	4/1980	Barrot et al.	74/61
4,313,535	2/1982	Carmichael	198/766
4,793,196	12/1988	Davis et al.	74/61
4,942,776	7/1990	Quirk et al.	74/61
5,131,525	7/1992	Musschoot	198/770
5,231,886	8/1993	Quirk et al.	74/61
5,584,375	12/1996	Burgess, Jr. et al.	198/770 X
5,615,763	4/1997	Scrieber	198/770 X

FOREIGN PATENT DOCUMENTS

2528269	1/1976	Germany	198/770

Primary Examiner—James R. Bidwell

Attorney, Agent, or Firm—Bockey, Milnamow & Katz, Ltd.

[57] **ABSTRACT**

A vibratory apparatus for use with associated vibratory conveyance equipment includes a pair of counter-rotating shafts respectively carrying counter-rotating eccentrically mounted weights for generating vibratory forces attendant to counter-rotation of the shafts. Economical manufacture of the apparatus is promoted by providing a toothed belt drive for effecting counter-shaft rotation, with externally-mounted bearing assemblies provided to facilitate periodic bearing maintenance. A housing of the apparatus is configured as a fabricated composite beam assembly to promote economical manufacture, and mounting and integration of the vibratory apparatus with associated vibratory feed equipment.
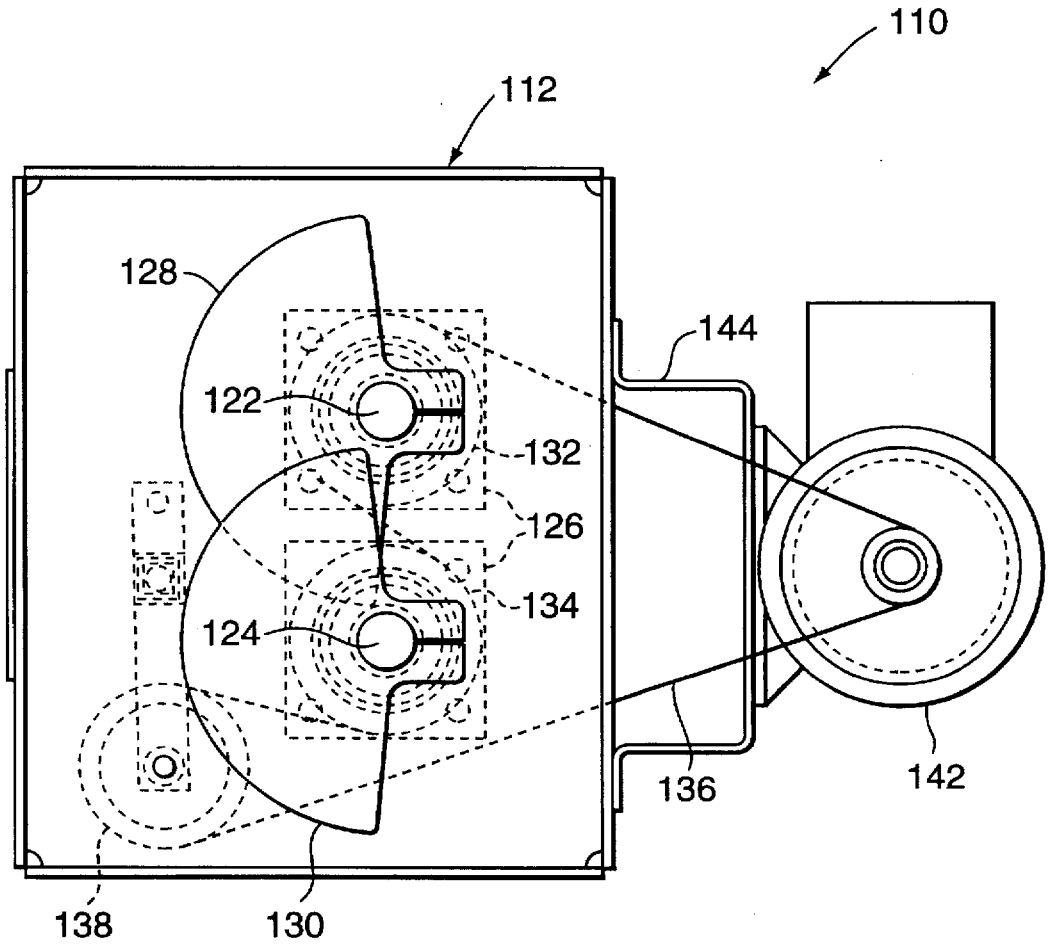
9 Claims, 4 Drawing Sheets