FIG. 4

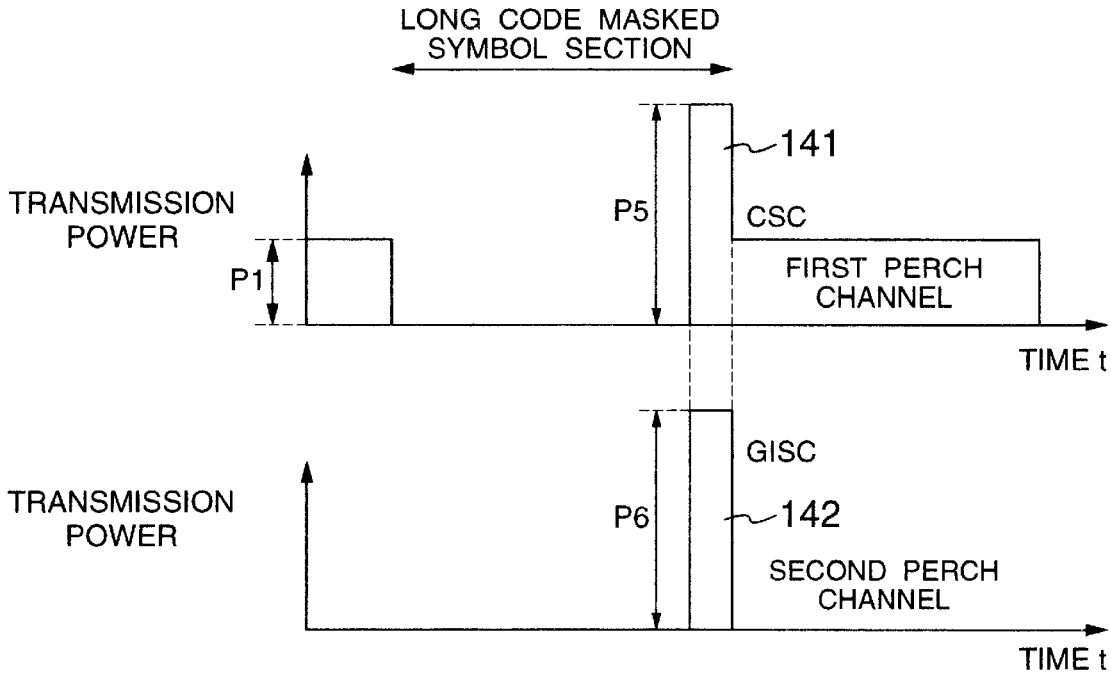
LONG CODE MASKED
SYMBOL SECTION
TRANSMISSION
POWER
P1
P5
141
CSC
FIRST PERCH
CHANNEL
TIME t
TRANSMISSION
POWER
P6
GISC
142
SECOND PERCH
CHANNEL
TIME t

FIG. 5

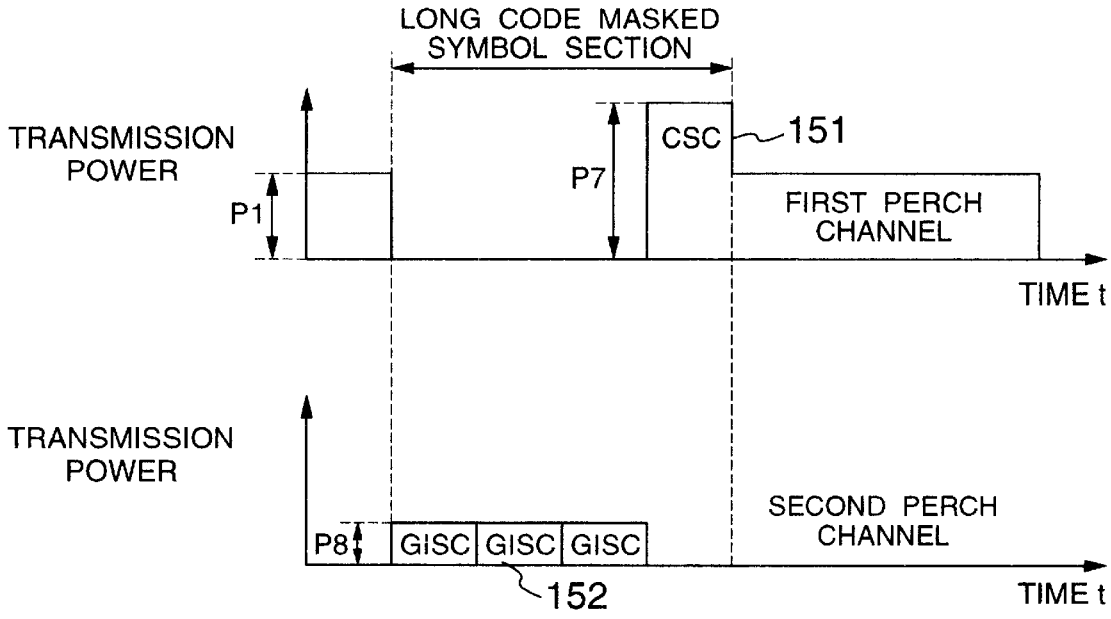
LONG CODE MASKED
SYMBOL SECTION
TRANSMISSION
POWER
P1
P7
CSC
151
FIRST PERCH
CHANNEL
TIME t
TRANSMISSION
POWER
P8
GISC
GISC
GISC
152
SECOND PERCH
CHANNEL
TIME t