FIG. 12

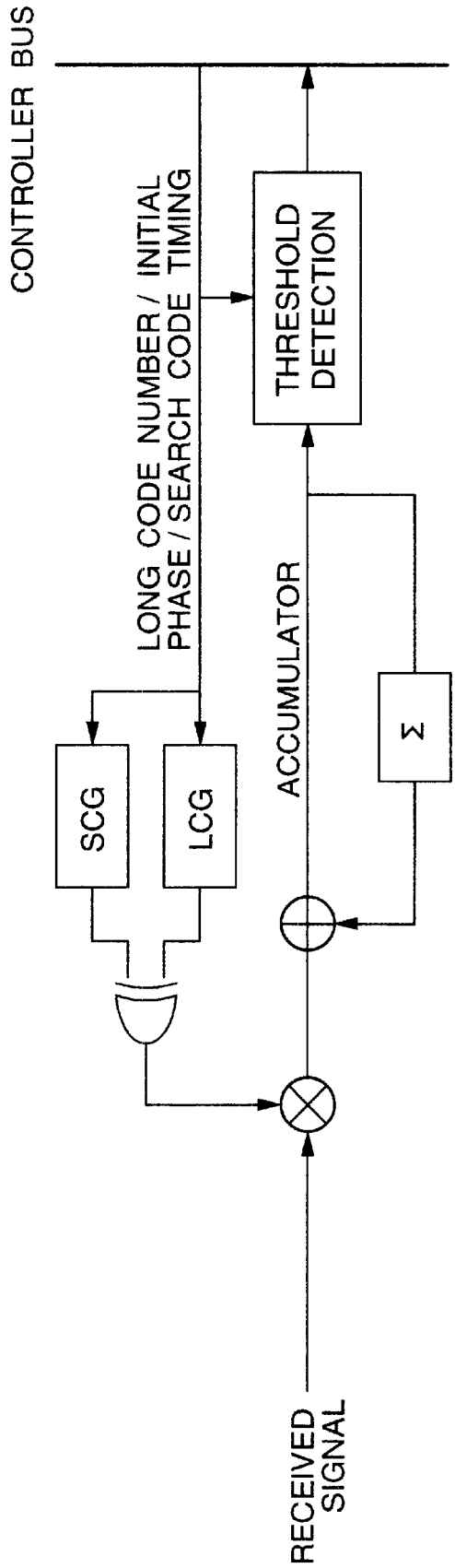
CONTROLLER BUS
LONG CODE NUMBER / INITIAL PHASE / SEARCH CODE TIMING
THRESHOLD DETECTION
SCG
LCG
ACCUMULATOR
Σ
RECEIVED SIGNAL