FIG. 11

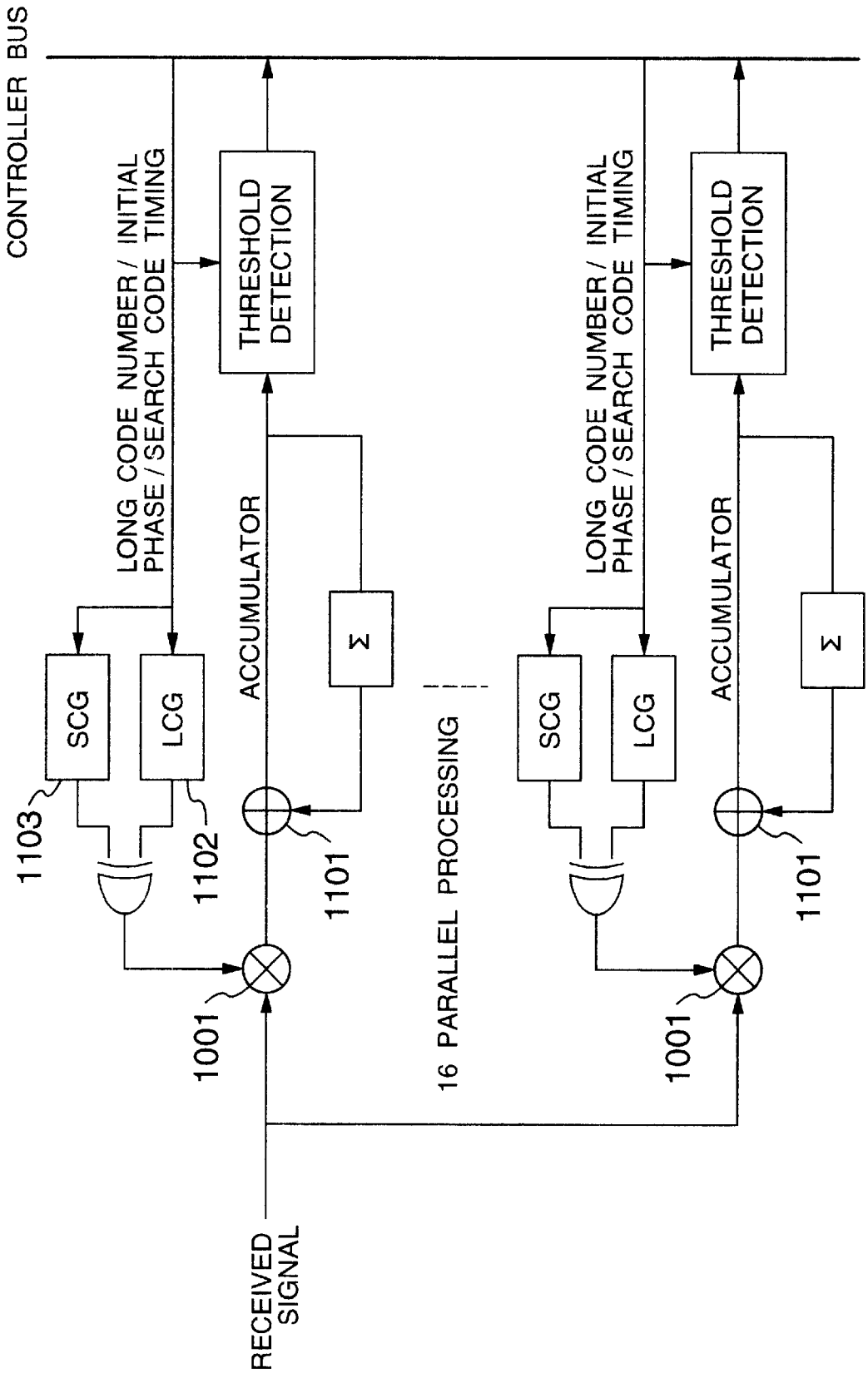
CONTROLLER BUS
LONG CODE NUMBER / INITIAL PHASE / SEARCH CODE TIMING
THRESHOLD DETECTION
ACCUMULATOR
Σ
SCG
LCG
1103
1102
1101
1001
16 PARALLEL PROCESSING
RECEIVED SIGNAL