L. MYERS.

Improvement in Striking-Clocks.

No. 131,175. Patented Sep. 10, 1872.

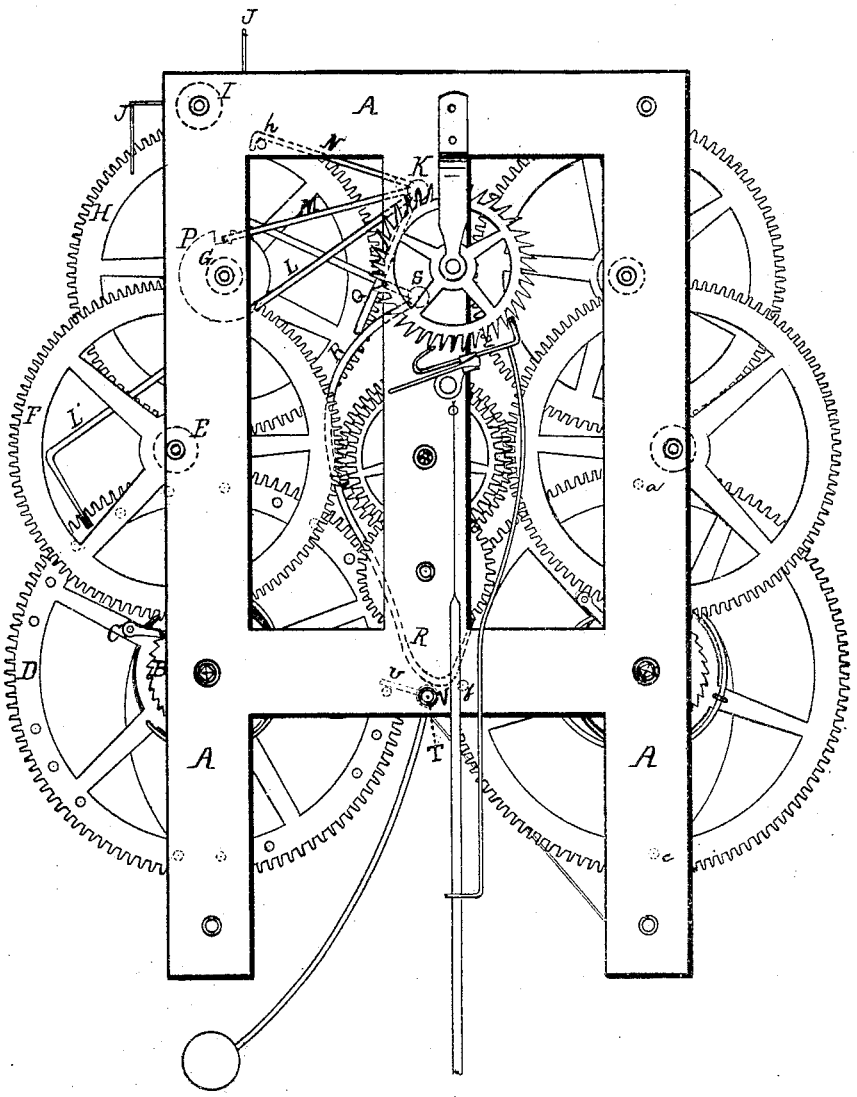

Witnesses:

Wm R. Wright

M. H. Walton

Inventor.

Laurence Myers,

by his Atty,

Horace Binney, 3rd

AM. PHOTO-LITHOGRAPHIC CO. N.Y. (OSBORNE'S PROCESS.)