FIG. 1

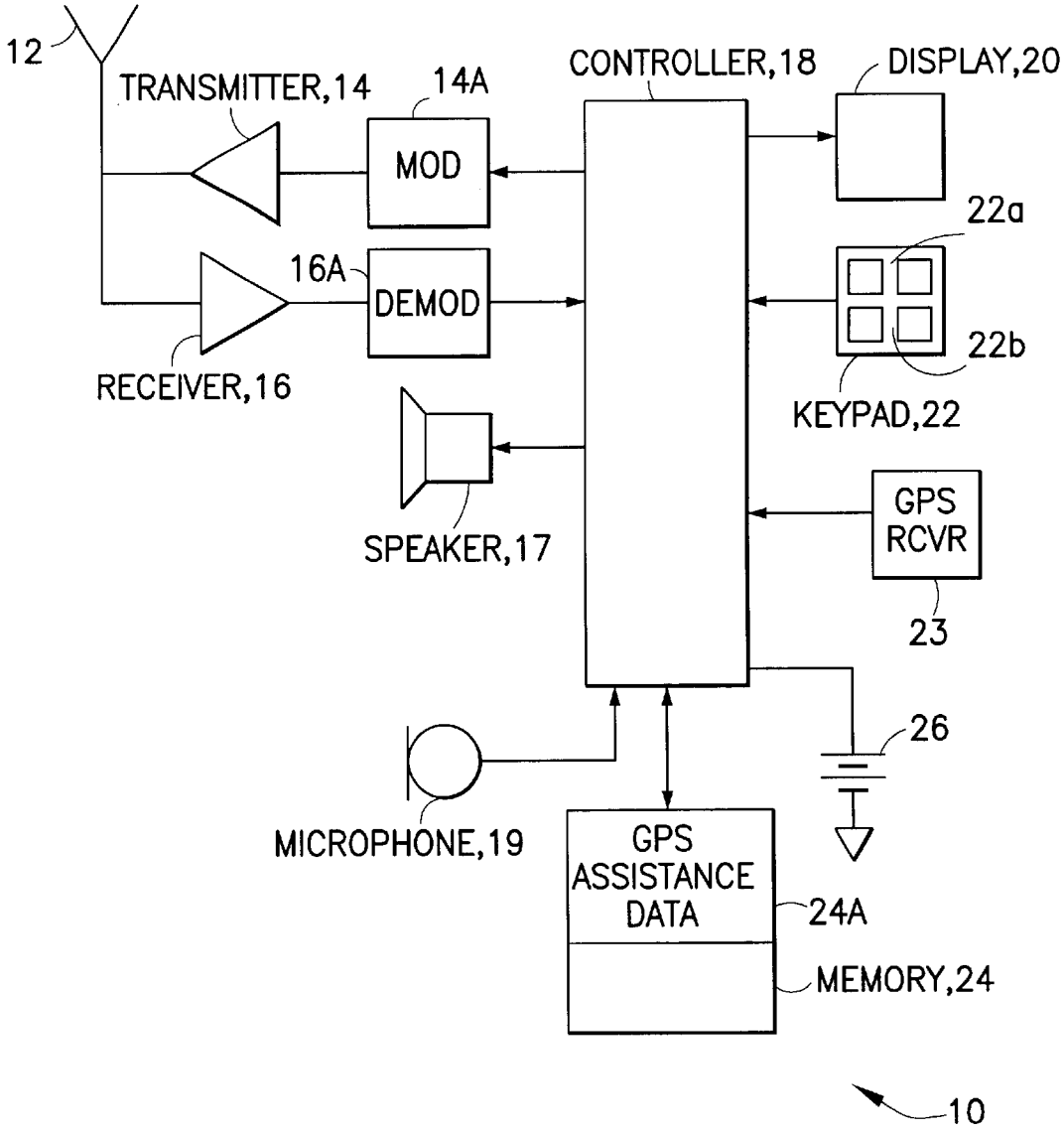
12
TRANSMITTER,14
14A
MOD
CONTROLLER,18
DISPLAY,20
22a
16A
DEMOD
22b
RECEIVER,16
KEYPAD,22
SPEAKER,17
GPS
RCVR
23
26
MICROPHONE,19
GPS
ASSISTANCE
DATA
24A
MEMORY,24
10