No. 656,874. Patented Aug. 28, 1900.

F. E. BALDWIN.

ACETYLENE GAS LAMP.

(Application filed Oct. 18, 1899.)

(No Model.) 2 Sheets—Sheet 1.

Fig. 1

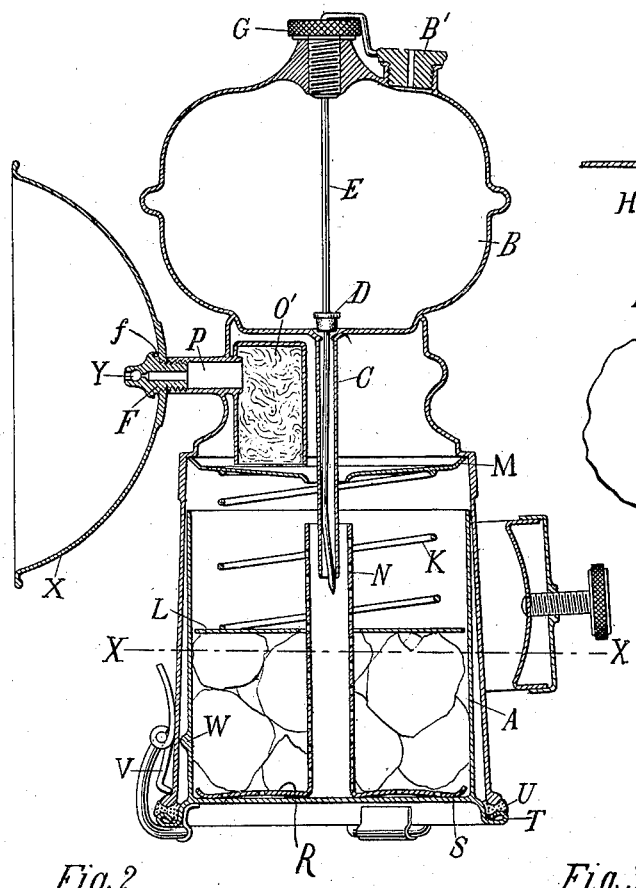

Fig. 4

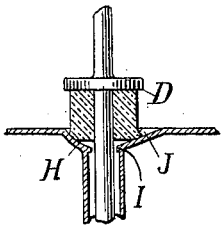

Fig. 5

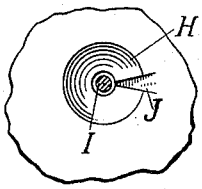

Fig. 2

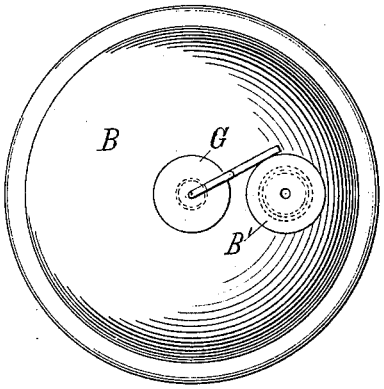

Fig. 3

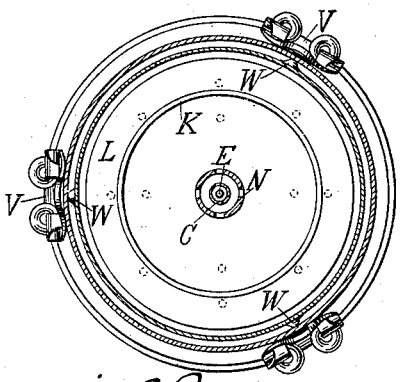

Witnesses:
Raphael Netter
M. Lawson Dyer.

Frederic E. Baldwin Inventor

by Kerr, Page & Cooper Att'ys

THE NORRIS PETERS CO., PHOTO-LITHO., WASHINGTON, D. C.