SOURCE FOR VAPOR DEPOSITION

Filed Feb. 3, 1958 2 Sheets-Sheet 1

Fig. 1.

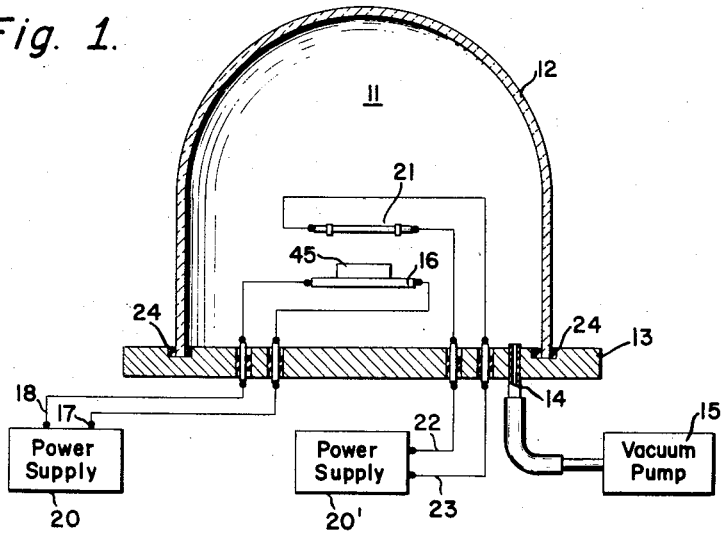

Fig. 2.

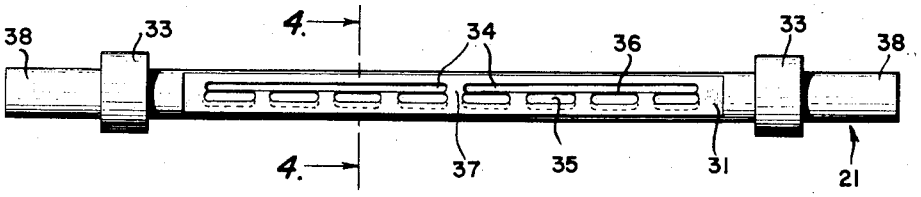

Fig. 3.

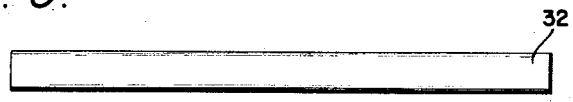

Fig. 4.

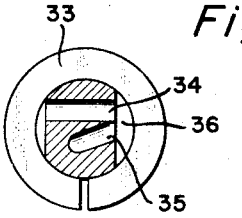

Jon H. Myer,
Richard A. Gudmundsen,
INVENTORS.
BY Billy a. Robbins
ATTORNEY.